WISCONSIN DEPARTMENT OF NATURAL RESOURCES

Registration Permit Application Guidebook

For facilities applying for Type C Registration Permits

Air Management Program

Publication Number: AM-582-2022

Table of Contents

PART I - INTRODUCTION

This document contains basic registration permit information to assist facilities in determining if a registration permit is the correct choice for the facility. The document will familiarize facilities with all steps in the registration permit application process, the differences between a registration permit and traditional permits, and expectations once a facility is covered under a registration permit. The specific statutes and rules interpreted by this guide are s. 285.60(2g), Wis. Stats., and ss. NR 406.17 and NR 407.105, Wis. Adm. Code.

There are four types of registration permits: Type A, Type B, Type C and Type G (G01 and G02). This application guide will address only the Type C Registration Permit (ROPC).

- Type A allows emissions up to 25% of the major source threshold for federally regulated hazardous air pollutants (HAPs) and criteria air pollutants: volatile organic compounds (VOCs), particulate matter (PM), carbon monoxide (CO), lead (Pb), nitrogen oxides (NO_x), and sulfur dioxide (SO_2).
- Type B allows emissions up to 50% of the major source threshold for federally regulated HAPs and criteria air pollutants.
- Type C is specific for printing facilities and allows emissions up to 25% of criteria pollutants and up to 50% of the major source threshold for federally regulated HAPs.
- Type G includes permits G01 and G02 which are specific for facilities intending to achieve or having achieved Tier 2 status in the Green Tier Program and allow emissions up to 80% of the major source threshold for HAPs and criteria air pollutants.

The major source threshold is dependent upon the attainment and nonattainment status of each area in the state. For most areas in the state, the current (as of August 2022) threshold is 100 tons per year for each criteria pollutant, 10 tons per year for each HAP and 25 tons per year for all HAPs combined. For nonattainment areas, see Page 21 for more details on the areas and the thresholds, or go to the Wisconsin Department of Natural Resources' (DNR) Nonattainment webpage (https://dnr.wisconsin.gov/topic/AirPermits/Nonattainment.html).

More information regarding all registration permit types can be found on DNR's Registration permit webpage (*https://dnr.wi.gov/topic/AirPermits/Registration.html).*

1. What are registration permits?

The registration operation permit (ROP) is a standardized air pollution control operation permit which authorizes facilities with low emissions to operate. The ROP places a limit on the amount of air pollution a facility can emit and includes the methods that must be used to demonstrate compliance with the permit limits. Coverage under the ROP can also exempt a facility from construction permitting. In most cases, a covered facility can make changes and add equipment without obtaining a construction permit so long as the facility continues to emit below the ROP limit and meet the eligibility requirements of the ROP. The exemption to this case is the Type G registration permit which allow the permittee to have source-specific conditions under the permit coverage, but those conditions shall be originated from a source-specific construction permit.

Issued along with the Types A, B, C and G02 ROP is a companion registration construction permit (RCP). All facilities that apply for coverage under the Types A, B, C and G02 will also apply for coverage under the companion RCP, using a single application form. The same eligibility requirements, compliance requirements, and procedures for obtaining coverage apply to both RCPs and ROPs. The remainder of this document refers to the RCP and ROP collectively as "registration permits."

2. What are the pros and cons of a registration permit?

A registration permit has several advantages over a "traditional" operation permit. These advantages include:

- Time-savings:
  - Simplified permit application process
  - Quick permit decision – 15 days
  - Permit does not expire and never has to be renewed
- Money-savings:
  - No construction permit fees; exempts facilities from construction permitting so long as the construction does not result in emissions that exceed the limits or trigger a rule that makes the facility ineligible for the registration permit.
  - No revision or renewal or construction permit applications to submit
- Flexibility:
  - More flexibility in choosing methods for demonstrating compliance
  - Changes can be made immediately without obtaining a construction permit
  - Safe Harbor - Protects facilities that make reasonable efforts to identify and comply with applicable state air pollution regulations from enforcement. (See Section 5 for additional details.)

A drawback of a registration permit is that it does not identify all state and federal air pollution regulations that could apply to a facility. The DNR has developed tools to assist facilities in identifying and complying with applicable air pollution regulations. Refer to DNR's Registration Permit webpage (https://dnr.wisconsin.gov/topic/AirPermits/Registration.html) and the printer portal for these tools. Significant effort and facility staff time may be required to identify which requirements apply and to determine how the facility will demonstrate compliance. If the facility has a permit that was issued by the DNR in the past, that document would contain pertinent information on applicable requirements and compliance demonstration methods.

3. How can a facility obtain a Type C registration permit?

Obtaining a registration permit is an easier and more streamlined process than acquiring a traditional permit. The process includes:

A. Reviewing the registration permit application questions and determining if the facility is likely to qualify for a Type C registration permit. Part II of this guide contains additional help on answering those questions. The registration permits section of the DNR's website, (*https://dnr.wi.gov/topic/AirPermits/Registration.html)*, also provides registration permit compliance guidance to explain how to take advantage of the benefits and fulfill the obligations of coverage under a registration permit.

B. Some registration permit application questions may require additional work and effort by the facility before the facility is ready to apply:

i. Estimating annual emissions – A facility must be able to submit an estimate of the annual emissions of criteria pollutants and HAPs. Assistance with calculating emissions is available

under the air section on Wisconsin's Small Business Environmental Assistance Program (SBEAP) website (*http://dnr.wi.gov/topic/smallbusiness/).*

ii. Stack Requirements and Air Quality Modeling – The registration permit requires stacks at the facility be vertical, without obstructions such as rainhats, and taller than nearby buildings. If stacks at the facility do not meet registration permit stack requirements, the facility can still qualify for the registration permit by using air quality modeling results to show that emissions from the stacks meet all the air quality standards. Use the Modeling Assessment form (*https://dnr.wi.gov/files/PDF/forms/4500/4530-156A.pdf*) to provide air quality modeling results demonstrating that the facility emissions meet NAAQS. (See Question 7)

C. Go to the General and Registration Permit Forms tab on the Air Permit and Compliance Forms Webpage and download Form 4530-172 for the Type C Registration Construction and Operation Permit for Printers Application. Answer the questions, complete the facility information and, if necessary, the Modeling Assessment. Submit the completed application and any attachments using either Option 1 or Option 2 below:

Option 1:

Email an ELECTRONIC COPY* to DNRAMAirPermit@wisconsin.gov.

*Applications must be signed by the responsible official for the source. If submitting an electronic application, the DNR will send an email with instructions for e-Signing or submitting an ink signature upon receipt of the electronic application. A photocopied or scanned signature does not meet the DNR's signature requirements. The DNR will not process an application until the signature is received.

OR

Option 2:

Mail the original copy of all materials with ink signature to:

WISCONSIN DEPARTMENT OF NATURAL RESOURCES
AIR MANAGEMENT PROGRAM
Attn: Permits
P.O. Box 7921
MADISON, WI 53707-7921

Within 15 business days of receiving the complete signed application, the DNR will, if necessary, request additional information or notify the facility of its decision on whether to grant coverage to the facility under the registration permit. When applying for registration permit coverage, the facility is also requesting revocation of any existing permits issued to the facility, if they hold a traditional or other registration permit.

The revocation step will add time to the review. If the facility has existing permits, the application will be declared incomplete until a notification is mailed to interested parties and posted on the DNR's public notice website and either a 14-, 21-, or 30-day waiting period has passed. The waiting period for

revocation of construction permits is 14 days, state operation permits is 21 days and Title V operation permits is 30-days. Existing permits will remain active until the registration permit coverage is approved. Facilities interested in obtaining source-specific conditions along with the registration permit coverage may need to apply for a new source-specific construction permit or the revision of an existing source-specific construction permit.

4. What are the continuing obligations under the registration permit?

Facilities should be aware of other considerations that may result after being covered under the registration permit:

- Permits and/or orders that were previously issued to the facility may be revoked when the facility applies for coverage under the registration permit. Specific conditions in these permits will also be revoked.
    - An example is the Latest Available Control Technology (LACT) requirement. If the facility emits organic compounds and is subject to s. NR 424.03, Wis. Adm. Code, the facility may have a LACT determination and requirements in an old permit that are specifically tailored to the facility. When the ROP coverage is granted, the facility will be required to either control emissions by 85 percent or follow the LACT requirements contained in the registration permit.
    - Another example would be if a permit included a limit on volatile organic compounds (VOCs) to avoid a Reasonably Available Control Technology (RACT) limit in ch. NR 422, Wis. Adm. Code. That limit will no longer be in a permit and the facility must comply with the RACT VOC limits that apply to their printing or coating operations.
- Once covered under the registration permit, the facility must continue to meet all applicable air pollution emission limitations and requirements in chapters NR 400 – NR 499, Wis. Adm. Code and all applicable federal requirements, even though they are not explicitly listed in the registration permit.
- Facilities are required to monitor and record operation and emissions related data as specified in the registration permit and as required to demonstrate compliance with all applicable state and federal air pollution regulations.
- Facilities are required to submit an annual compliance certification and annual monitoring report to address all permit requirements by March 1, of every year after the first calendar year of coverage under the registration permit that:
    - Certifies compliance with the terms and conditions of the registration permit as well as all other applicable state and federal air pollution regulations; and
    - Provides a summary of monitoring conducted at the facility.

  Facilities can use Form 4530-178 or similar to meet this requirement.
- Facilities covered under a registration permit are required to report emissions to the Wisconsin Air Emissions Inventory if emissions exceed the reporting thresholds in ch. NR 438, Wis. Adm. Code. Check reporting thresholds for each pollutant on DNR's webpage (https://dnr.wi.gov/cias/am/amexternal/pollutantsnr438.aspx). If emissions are less than reporting thresholds, the facility must submit an under-threshold notification (UTN) to the DNR. Either the Air Emissions Inventory report, or the UTN, is due by March 1 each calendar year. An extension of this deadline until March 15 may be requested by the permittee and approved by

the DNR. Learn more about the emissions reporting system on DNR's website (https://dnr.wisconsin.gov/topic/AirEmissions/Tutorials.html).

- If reporting emissions is required under ch. NR 438, Wis. Adm. Code, **a certification is also due** at the end of June every year; this certification differs from the permit specific annual compliance certification and monitoring report due at the beginning of March.
- If facilities use pollution control devices such as oxidizers, baghouses, or cyclones, they must meet the control efficiencies listed in the registration permit. These efficiencies must be used to calculate their emissions for demonstrating compliance with the registration permit emissions limit. If an emission unit is subject to an applicable limitation that specifically requires a different control efficiency, then the facility may use that control efficiency to calculate emissions, but only for the emission unit covered by the requirement. For example, the lithographic printing requirements in s. NR 422.143 requires an overall control efficiency of 95%, while the permit allows 90% overall control efficiency. A facility meeting NR 422.143 may use 95% overall control efficiency to demonstrate compliance with the permit limit.
- Once covered under the registration permit, changes can be made to the facility without having to obtain a construction permit, as long as the facility continues to meet the terms and conditions and the eligibility requirements for the registration permit. If the facility will not meet a term or condition of the registration permit or will become ineligible, the facility must apply for and receive a traditional permit from the DNR before any changes are made that may result in the facility becoming ineligible for the registration permit.
- Heatset web offset printing facilities whose stacks do not meet the stack requirements described in Question 7, or whose emissions are uncontrolled may have to perform additional air quality modeling before making changes that would increase emissions or decrease the dispersion of air pollution.

5. What is "Safe Harbor?"

Safe harbor is a "grace period" of 90 days for facilities to achieve compliance with an applicable regulation in chs. NR 400-499 that a facility did not know it was subject to and subsequently violated or are currently violating. Safe Harbor is available as long as the facility previously made a good faith effort to identify the regulations in chs. NR 400 – 499 that apply to its operations.

The following Safe Harbor provisions only limit the ability of the DNR to take enforcement actions. Under the currently approved State Implementation Plan (SIP), the U.S. Environmental Protection Agency (EPA) retains the ability to pursue enforcement in cases where the DNR could not do so.

Safe harbor means there is no penalty for non-compliance discovered at a facility (i.e., the DNR will not take enforcement action), if all the following are met:

- The facility performed and documented a reasonable search and evaluation to identify applicable air pollution regulations and to determine if the facility was meeting those requirements;
- The facility retains documentation demonstrating the search and evaluation that was conducted was reasonable. This documentation must be kept on site and be available for inspection by DNR personnel upon request;
- If the facility subsequently discovers a regulation that applies to it, the facility notifies the DNR of the overlooked regulation within 21 days of identifying it; and

- The facility achieves and certifies compliance with the applicable regulation within 90 days after notifying the DNR.[1] A facility can ask the DNR to extend the grace period if more time is needed to achieve compliance.

Safe harbor recognizes that air pollution regulations are complex and numerous. With safe harbor, a facility has an incentive to rigorously investigate and follow up on its compliance status and work with the DNR to find the best way to meet the obligations and standards in the law.

How does a facility qualify for safe harbor?

- Operate in compliance with the registration permit that the facility is covered under;
- Conduct a *reasonable search and evaluation* initially, and again when emission units are added or modified, when new regulations are published, or when an industry association develops new data:
  - Identify regulations found in chs. NR 400-499, Wis. Adm. Code, which apply to the facility.
  - Determine whether the facility is meeting those regulations.
- Maintain documentation on-site to demonstrate the search and evaluation that was conducted prior to identifying the applicable regulation was reasonable;
- After this search and evaluation, continue to operate in compliance with the regulations that were identified;
- If non-compliance with a previously unidentified applicable regulation is discovered at some point after the search and evaluation:
  - Submit a written notification to the DNR **within 21 days** after identifying non-compliance with an applicable requirement;
  - Certify that the facility is in compliance with the applicable requirement by the appropriate deadline:
    - By default, no later than 90 days after submitting notification; or
    - If an extended deadline is requested by the permittee and granted by the DNR, then by the deadline specified by the DNR; or
    - If the DNR orders a deadline less than 90 days after submitting the notification, then by that deadline.

How does a facility know and demonstrate that their search and evaluation was "reasonable?"

Section NR 407.105(7), Wisconsin Administrative Code (WAC), indicates that "[a] reasonable search and evaluation" includes a search and evaluation of chs. NR 400 to 499 and shall include a reasonable effort to review other readily accessible information relevant to the facility's operations, such as databases, workshops and materials available through trade associations, vendors, the DNR's SBEAP, U.S. EPA and other recognized sources of information on air regulations.

Keep a written copy of the results of the search and evaluation at the facility for inspection upon request for as long as the facility is covered under the registration permit.

[1] The department has the authority to order the facility to achieve compliance in a shorter time period if the shorter time period is feasible and necessary to protect public health and the environment.

6. Are there fees associated with a registration permit?

Yes. Once covered under a registration permit, all facilities are charged a $400 fee due annually by June 30. There is no fee associated with applying for a registration permit.

7. What are the other options if the facility is not eligible for the registration permit?

The purpose of this guide is to prepare facilities to accurately answer the registration permit application questions, and to advise, before using the application, whether the facility is eligible for the registration permit.

The registration permit eligibility status is NOT a permanent determination. Facilities not eligible at this time, may make operational changes and apply again. For example, if the control equipment does not meet the control requirements in the registration permit, the facility can make improvements and reapply. If the emissions are over the emission threshold, the facility can reformulate a raw material, install control equipment, or make other process changes to reduce emissions and reapply. More information can be found on DNR's Air Permit Options webpage (*https://dnr.wi.gov/topic/AirPermits/Options.html)*.

PART II - REGISTRATION PERMIT APPLICATION INSTRUCTIONS

(Each question (1-8) is listed below along with the additional information exactly as it is written in the August 2020 version of the ROP C02 application, 4530-172, followed by further supporting information provided by this guide. Please note which version of the application is being completed.)

---

1. Facility Classification as a Printer

Question 1:
Is your facility classified primarily as a printer? ☐Yes ☐No

- If you answer "No", you are not eligible for the ROPC.
- If you answer "Yes", go on to Question 2.

ADDITIONAL INFORMATION: *For the purposes of the Type C registration permits for Printers, a printer is any facility that identifies a primary Standard Industrial Classification (SIC) Code of 23, 26 or 27 or a primary North American Industry Classification System (NAICS) code of 3231xx or 5111xx for the operations at their business. Printing should not be an ancillary operation at any business that applies for coverage under the Type C registration permits.*

What does this question mean?
The Type C registration permit for printers is only available to facilities that are classified "primarily" as printers. Primary classification is determined by the first two digits of the SIC code or the NAICS code. These codes are the common standards for identifying the industrial sector which best characterizes a facility's products, services, and manufacturing processes. If the facility does some printing but uses a different SIC or NAICS code than those listed above, then the facility will not qualify for Type C registration permit for printers.

How to determine if a facility is classified primarily a printer?
The DNR uses the Standard Industrial Classification (SIC) code or the North American Industry Classification System (NAICS) Code to determine if a facility is primarily a printer. Printing should not be an ancillary operation at the facility. For more help in determining which SIC or NAICS code best describes the facility, consult the U.S. Census Bureau's NAICS website (www.census.gov/naics/) or the NAICS association website (https://www.naics.com/).

How will the facility's status for obtaining the Type C registration permit for printers be affected if it does not classify the facility primarily as a printer?
In that case the facility is not eligible for the Type C registration permit for printers. However, the facility may qualify for another registration permit available for all different types of businesses with low actual emissions. Check the facility's eligibility for registration permits on DNR's Registration Permit webpage (https://dnr.wi.gov/topic/AirPermits/Registration.html).

---

2. Existing Air Permits

Question 2:

Does the facility have any existing air permits (construction or operation)? ☐Yes ☐No

ADDITIONAL INFORMATION: *ADDITIONAL INFORMATION: To qualify for ROPC, all existing permits (active and inactive) must be revoked, and all applications withdrawn. This application constitutes your request for those revocations and withdrawals to take place. Before your registration permit application is declared complete, a notification of our intent to revoke your previously issued permits will be prepared followed by a 14-day, 21-day or 30-day waiting period. After the waiting period is over, your application will be declared complete and the review of your registration permit application will begin. A final decision on ROPC coverage will be made within 15 days of the application being declared complete. If your facility qualifies for coverage, then you'll receive coverage approval under the ROPC, your existing permits will be formally revoked, and any pending air permit applications withdrawn.*

What does this question mean?

The term 'construction permit' refers to a permit that was issued to a facility to authorize construction or modification of one or more processes that are air emission "sources." The term 'operation permit' refers to a permit that was issued to a facility to authorize the operation of those processes at a facility. The term 'existing permit' refers to the status of the construction or operation permit. Regardless of expiration dates and actions that may have affected an order or permit, an order or permit is considered to be "existing" if it has not been formally "revoked" by the DNR.

The registration permit is the only permit the facility can have. If the facility has any existing construction or operation permits, or orders (e.g. consent orders, administrative decisions, etc.) these permits and orders will be revoked when the facility is covered by the registration permit. Upon the facility's request, the DNR will review the existing permits to determine if they can be revoked. If they can be revoked, the DNR will satisfy the permit revocation notification requirements dictated by state statute, and then notify the facility that the existing permits and orders can be revoked.

What if a facility needs more help determining if it is currently covered by existing construction or operation permit(s)?

- If a facility is unsure whether it is subject to a case-by-case determination, visit the DNR's Air Permit Search Tool (*http://dnr.wi.gov/topic/AirPermits/Search.html)*. (Note: If the facility has permits issued prior to 1990, they may not be located on this website.)
- Contact the facility's assigned compliance engineer for additional help in the determination. Use the Air Permit Search Tool to find the facility records then under "DNR Air Contacts," look for the staff listed as Air Compliance Inspector.
- Contact the registration permit coordinator at *DNRamROPSairpermit@wisconsin.gov* for additional help in the facility's determination.

---

3. State HAP Control Requirements

Question 3:

Are any emission units at your facility subject to Best Available Control Technology (BACT) or Lowest Available Emission Rate (LAER) under ch. NR 445, Control of Hazardous Pollutants (i.e. Air Toxics), Wis. Adm. Code? ☐Yes ☐No

- If you answer "No", go on to Question 4.
- If you answer "Yes", then you are indicating that you have an emission unit subject to a case-by-case determination under BACT or LAER. A facility that needs BACT or LAER requirements to be included in an individual permit is not eligible for a Registration Permit and should instead apply for a conventional air permit.

ADDITIONAL INFORMATION: *The owner or operator of a source that emits a non-exempt state hazardous air contaminant for which a control requirement is identified in column (i) of Table A of section NR 445.07, Wis. Adm. Code, in a quantity that requires the facility to apply BACT or LAER do not qualify for Registration Permit coverage (http://docs.legis.wisconsin.gov/code/admin_code/nr/400/445).*

"Best available control technology" or "BACT" means an emission limit for a hazardous air contaminant based on the maximum degree of reduction practically achievable as specified by the department on an individual case-by-case basis considering energy, economic and environmental impacts and other costs related to the source. "Lowest achievable emission rate" or "LAER" means the rate of emission of a hazardous air contaminant that reflects the more stringent of the following: (a) The most stringent emission limitation for the hazardous air contaminant which is contained in the air pollution regulatory program of any state for this class or category of source, unless an applicant for a permit demonstrates that this limitation is not achievable; (b) The most stringent emission limitation for the hazardous air contaminant which is achieved in practice by the class or category of source.

If you have existing permits, they can help you determine if you have emission units covered by BACT or LAER requirements. When answering this question, please note that the emission caps in the Registration Permit are considered enforceable caps on potential to emit. These limits may eliminate your need to retain any BACT or LAER requirements in existing permits. You can use the comment section below to provide additional information on such situations.

What does this question mean?

What are BACT and LAER?

BACT = Best Available Control Technologies
LAER = Lowest Achievable Emission Rate

BACT and LAER refer to control requirements for certain hazardous air contaminants in ch. NR 445 (also called state HAPs). These requirements are considered case-by-case determinations because they require the DNR to take into consideration the specific circumstances of each facility and process and set an emission limit or work practice standard that may be unique for that facility.

If a facility emits a hazardous air contaminant that has a control requirement listed in the tables of ch. NR 445, Wis. Adm. Code, and the annual emission rate from all stacks in a stack height category is greater than the thresholds specified in Tables A-C of ch. NR 445, the facility may be subject to BACT or LAER. The DNR will make a case-by-case determination of BACT or LAER to control emissions of these harmful substances. However, a facility may consider the restrictions on the emissions imposed by the registration permit when determining if the emission rates will be over the NR 445 thresholds after coverage. More information and a link to ch. NR 445, Wis. Adm. Code tables are available at the DNR's air toxic and mercury website: (*http://dnr.wi.gov/topic/airquality/toxics.html)*, specifically look for the combined spreadsheet tool tab and the Excel spreadsheet link (*https://dnr.wisconsin.gov/sites/default/files/topic/AirQuality/CombinedNR445RevTables.xls*) on the page.

How can a facility determine if it is subject to a case-by-case determination?

If the facility already has air permits for processes at the facility, the permits should be reviewed for the words BACT or LAER. If there are no permits or it cannot be discerned from the permit whether or not the facility is subject to BACT or LAER, contact the environmental assistance coordinators at SBEAP (DNRsmallbusiness@wisconsin.gov or 1-855-889-3021) for more help in determining whether or not the facility is subject to a case-by-case determination.

What if the facility was previously subject to a BACT or LAER requirement under NR 445, but now has emissions below the threshold?

If actual emissions of a hazardous substance at the facility are below the thresholds in ch. NR 445, the facility can obtain relief from the BACT or LAER requirements with a registration permit. When calculating emissions, the facility should look at the conditions in the registration permit (i.e., if the emissions are controlled, use the control efficiency in the registration permit). The facility may choose to perform risk modeling to demonstrate the predicted risk for the pollutant in question is below the allowable risk contained in NR 445.

What if a facility needs more help determining if it is currently covered by one of these control requirements?

- If a facility is unsure whether it is subject to a case-by-case determination, visit the DNR's Air Permit Search webpage (*http://dnr.wi.gov/topic/AirPermits/Search.html)*. (Note: If the facility has permits issued prior to 1990, they may not be located on this website.)
- Contact the facility's assigned compliance engineer for additional help in the determination. Use the air permit search tool to find the facility records, then under "DNR Air Contacts," look for the staff listed as "Air Compliance Inspector."
- Contact the registration permit coordinator at *DNRamROPSairpermit@wisconsin.gov* for additional help in the facility's determination.

---

4. Control Devices

Question 4:

Does your facility have any air pollution control devices? ☐Yes ☐No

- If you answer "No", go on to Question 5.
- If you answer "Yes", then fill out the table below for each device.

Control Device	Minimum Overall Control Efficiency for Total Enclosures			Minimum Overall Control Efficiency for Hood Capture			Your Device Efficiencies	
	PM	PM_{10} and PHAP	VOC and VHAP	PM	PM_{10} and PHAP	VOC and VHAP	Capture	Control
Low efficiency cyclone	40%	20%		32%	16%			
Medium efficiency cyclone	60%	40%		48%	32%			
High efficiency cyclone	80%	60%		64%	48%			
Wall filters (including paint overspray filters)	95%	95%		76%	76%			
Fabric and HEPA filters (e.g., baghouse and cartridge collectors)	98%	92%		78%	73%			
Thermal oxidizers			90%			76%		
Catalytic oxidizers			90%			76%		
Condenser			70%			56%		
Biofiltration			80%			64%		

ADDITIONAL INFORMATION: *The emission cap for the ROPC is less than 25% of the major source thresholds for criteria pollutants and 50% for Hazardous Air Pollutants (HAP), which in most areas of the state equates to less than 25 tons/year each for NOx, SO_2, CO, VOC, PM_{10} and $PM_{2.5}$, 5 tons/year for a single HAP, 12.5 tons/year for all HAPs combined, and 0.5 tons/year for lead. The ROPC requires control devices to meet a minimum percentage for overall control efficiencies unless the facility operates a control device that is required by an applicable standard or regulation. Please list the applicable requirement or standard and the applicable limits or control efficiencies in the comments section below. Only the control devices listed above can be used for calculating actual emissions. Total enclosure means 100% capture efficiency, and hood capture means < 100% capture efficiency. The overall control efficiency is calculated by multiplying your capture and control efficiencies. If you use more than one of the same type of control device, please describe this in the comments section below.*

What does this question mean?

The registration permit contains the control devices and the minimum control efficiency levels that control devices at a facility must meet or exceed. In order to qualify and remain eligible for the registration permit, the facility must first identify all control devices at the facility. Also, the facility must determine the actual control efficiency for each control device and compare this efficiency to the appropriate minimum control efficiency level that is listed in the table above in Question 4. A description of how to determine control efficiency is included below.

What does control efficiency mean?

Control efficiency is a measure of air pollution reduction. It is a percentage value representing the amount of air pollution emission reduction caused by a control device. Occasionally devices may be used to collect process materials that can be reused as part of the process.

When evaluating whether this type of equipment is inherent to the process, the DNR considers the questions outlined in a November 27, 1995 letter from David Solomon, Integrated Implementation Group, U.S. EPA, to Mr. Timothy Mohin, Government Affairs, Intel Corporation. The letter addresses situations for which case-by-case judgments may be needed regarding whether control equipment should be considered as air pollution control equipment, or whether that equipment is an inherent part of the process. Provide detailed information to answer the following questions:

- Is the primary purpose of the equipment to control air pollution?
- Where the equipment is recovering product, how do the cost savings from the product recovery compare to the cost of the equipment?
- Would the equipment be installed if no air quality regulations are in place?

Provide specific details to elaborate the answers and include a quantitative cost savings analysis. The DNR will review the responses to these questions and make a case-by-case determination whether the equipment is inherent to the process.

If the DNR approves a control device as inherent process equipment, the maximum theoretical emissions from the process take into account the removal efficiency of the inherent process equipment. If the facility uses a collection efficiency for the inherent process equipment that is greater than the control efficiency for that type of equipment allowed in the table below when calculating emissions, the application should include documentation supporting the collection efficiency used to determine emissions or documentation supporting the emission rate after the collection equipment. Examples of supporting documentation include equipment manufacturer control or emission guarantees, or stack test results that comply with the requirements in NR 439. For more details on stack test requirements, refer to SB119 or contact the ROP coordinator.

Note:

- Equipment typically considered to be air pollution control equipment that is determined to be inherent process equipment is subject to the same monitoring and recordkeeping requirements identified for that type of equipment in Section E of the ROP or s. NR 439.055, Wis. Adm. Code.

- If a collection efficiency for inherent process equipment is greater than the control efficiency for the type of equipment identified in Section G of the ROP, that section is used to determine emissions. Stack testing may be required as a condition of the approval for coverage under the ROP to demonstrate that the inherent process equipment provides the claimed collection efficiency or meets the claimed emission rate.

How is control efficiency calculated?

A control device's efficiency is defined using the following equation:

$$CE = \frac{E_{in} - E_{out}}{E_{in}} * 100\%$$

where:

CE = Control device efficiency (%)

E_{in} = Pollutant emission rate entering the capture system and delivered to a control device (lb/hr or similar units)

E_{out} = Pollutant emission rate exiting the control device (lb/hr or similar units)

For example, if a pollution control device's efficiency is stated as 90% removal or destruction efficiency, it means that for every 10 pounds of an air pollutant entering the device, only one pound of the pollutant is emitted to the atmosphere.

How is control efficiency determined?

A facility can determine the control efficiency by several means. The preferred, and most accurate, method is through actual performance testing of the control device at the facility, where the amount of pollution entering the control device is measured and the amount of pollution being emitted is measured. If performance testing at the facility has never been done, an alternative method of estimating the control efficiency is manufacturer's testing results or guarantees. This information should have been supplied in the documentation that came with the control device, if not, contact the manufacturer of the control device. Documentation is required to meet the compliance demonstration requirements of the registration permits.

What does overall control efficiency mean?

The overall control efficiency considers the capture efficiency and the control efficiency of the air pollution control system. The capture systems includes hoods, ducts, fans, booths, driers, etc. used to contain, capture, or transport an air pollutant to a control device. Hood means a partial enclosure or canopy for capturing and exhausting, by means of a draft, the air pollutants rising from the emission source. Details about VOC capture efficiencies from printing presses can found on DNR's *Emission Determination for the Printing Industry Supplement to EPA Guidance Documents* document (AM-525, https://widnr.widen.net/s/6xwswmx9l7/am525). The capture efficiency is calculated using the following equation:

$$DE = \frac{E_{in}}{E_{in} + F} * 100\%$$

where:

DE = Capture efficiency (%)

D = Pollutant emission rate entering the capture system and delivered to a control device (lb/hr or similar units)
F = Mass rate of fugitive pollutant that escapes the capture system (lb/hr or similar units)

The overall control efficiency is calculated using the following equation:

$$OCE = DE * CE * 100\%$$

where:

OCE= Overall control efficiency (100%)
DE = Capture efficiency expressed as decimal
CE = Control device efficiency expressed as decimal

In the case of total enclosures, the capture efficiency is 100%, and the overall control efficiency is equal to the control device efficiency.

If multiple control devices are used for the same process, how is combined control efficiency determined?

If more than one control device controls a pollutant from a process, there are different ways, depending on the configuration of the control devices, to determine the overall control efficiency.

- If the control devices are in parallel (as shown in Figure 4.1, below), simply compare the individual control efficiencies of each device with the required control efficiency in the registration permit.
- If the control devices are in series (as shown in Figure 4.2, below), use the following equation to determine the combined efficiency, and compare this efficiency with the required control efficiency in the registration permit:

$$CE_O = \left(1 - \left[\left(\frac{100 - CE1}{100}\right) * \left(\frac{100 - CE2}{100}\right) * \left(\frac{100 - CE1}{100}\right) \ldots\right]\right) * 100\%$$

where:

CE_O = Control efficiency from all control devices **<u>combined</u>**
CE1 = Control efficiency of first control device
CE2 = Control efficiency of second control device (if applicable)
CE3 = Control efficiency of third control device (if applicable)
... = Add more control devices into the equation if applicable

Figure 4.1 - Control Devices in Parallel

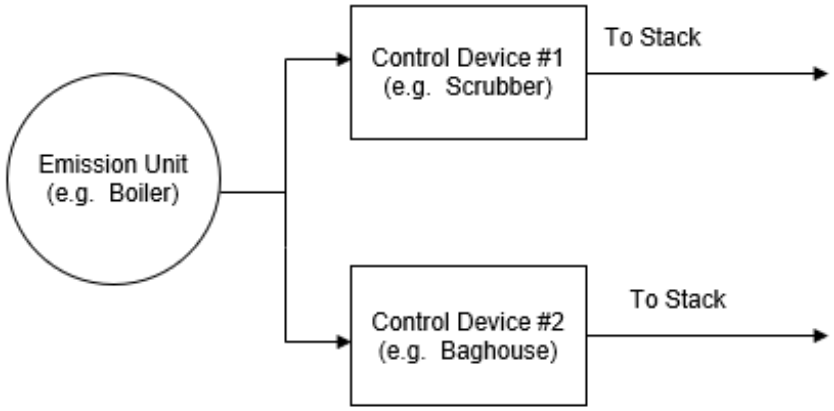

Figure 4.2 - Control Devices in Series

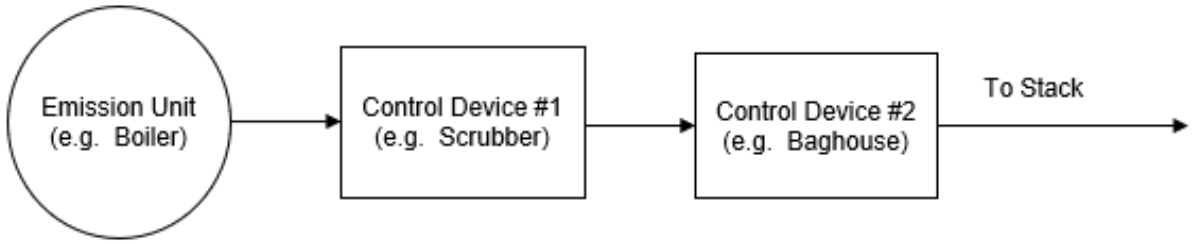

What if help is still needed in determining how to answer this question?

- Contact the registration permit coordinator at *DNRamROPSairpermit@wisconsin.gov* for additional help in the facility's determination.

---

5. Emission Limits

Question 5:

List your expected facility-wide annual calendar year emissions and maximum controlled annual emission rate for each of the following pollutants.

Once you have entered the emissions, go on to Question 6. Calculations must be attached to your application.

Pollutant	Annual Emissions (ton/yr)	Maximum Controlled Emissions (ton/yr)
PM_{10} (Particulate Matter less than 10 microns)		
$PM_{2.5}$ (Particulate Matter less than 2.5 microns)		
Sulfur Dioxide (SO_2)		
Nitrogen Oxides (NO_x)		
Carbon Monoxide (CO)		
Volatile Organic Compounds (VOC)		
Lead		

ADDITIONAL INFORMATION: *In order to qualify for the ROPC coverage, your calendar year emissions may not exceed 25% of the major source thresholds for criteria pollutants and 50% for Hazardous Air Pollutants (HAP), which in most areas of the state equates to less than 25 tons/year each for NOx, SO_2, CO, VOC, PM_{10} and $PM_{2.5}$, 5 tons/year for a single HAP, 12.5 tons/year for all HAPs combined, and 0.5 tons/year for lead. However, these emission caps could be lower if the facility is located in a non-attainment area. See https://dnr.wi.gov/topic/AirPermits/Nonattainment.html to determine if your facility is located in a nonattainment area and what major source thresholds apply.*

If you use a control device to meet an emission cap, you must use the control efficiency required by an applicable standard or use those preestablished control efficiencies listed in Question 4 for the calculation of emissions. Alternate control efficiencies can only be used for thermal and catalytic oxidizers that were tested within the last 5 years using an approved test method. Be sure to send copies of all calculations with the application, including sources of emissions factors.

Maximum controlled emissions are calculated using the maximum hourly capacity of the equipment and assuming operation 8,760 hours per year. Realistic operating scenarios may be considered in lieu of using 8,760 hours of operation such as time required to perform equipment set up. Include a clear explanation of calculation methods with your application.

Emissions from units listed in Attachment 3 do not need to be included in the application though additional information may be requested. For additional information on calculating your facility-wide annual emissions, there is further explanation of this in the ROPC Application Guidebook, publication number AM-582 (https://dnr.wi.gov/topic/AirPermits/Registration.html#tabx3).

What does this question mean?

A registration permit effectively limits a facility's potential to emit air pollution. Once the facility is covered under the registration permit, the facility must limit the calendar year actual emissions to below the limits so the facility can remain eligible for coverage under the registration permit. The table below shows the pollutants covered by the registration permit emission limits and the highest emissions allowed under each pollutant's limit, according to current major source threshold levels[2] in Wisconsin.

Emissions from the emission units listed under Appendix A of this guide are not required to be included in the facility-wide emissions.

Pollutant	Calendar Year Emission Limits
Particulate Matter less than 10 microns (PM_{10}) and Particulate Matter less than 5 microns ($PM_{2.5}$)	< 25 ton/year for PM_{10} and $PM_{2.5}$ attainment & moderate nonattainment areas < 17.5 ton/year for serious PM_{10} and $PM_{2.5}$ nonattainment areas
Volatile Organic Compounds (VOCs) Nitrogen Oxides (NOx)	< 25 ton/year for attainment and basic, rural transport, marginal or moderate ozone nonattainment areas < 12.5 ton/year for serious ozone nonattainment or areas within ozone transport regions except for any severe or extreme nonattainment area for ozone < 6.25 ton/year for severe ozone nonattainment areas < 2.5 tons/year for extreme ozone nonattainment areas
Carbon Monoxide (CO)	< 25 ton/year for attainment and moderate CO nonattainment areas < 12.5 tons/year for serious nonattainment areas, where the DNR determines a stationary source contributes significantly to CO levels in the area
Sulfur Dioxide (SO_2)	< 25 ton/year
Lead	< 0.5 tons/year
Section 112(b) Hazardous Air Pollutants (Federal HAP)[3]	< 5 ton/year for any *single* Federal Hazardous Air Pollutant < 12.5 ton/year for a *combination* of all Federal Hazardous Air Pollutants

What are these pollutants, and where might they be generated at a facility?

- **Particulate matter, or PM,** is the term for particles found in the air, including dust, dirt, soot, smoke, and liquid droplets. **PM_{10}** is the portion of particulate matter emitted which has a diameter less than or equal to 10 micrometers. **$PM_{2.5}$** has a diameter less than or equal to 2.5 micrometers. Direct emissions of $PM_{2.5}$ are predominantly from fuel combustion (e.g., boilers, space heaters, diesel generators) and other high temperature operations. $PM_{2.5}$ is known to cause more health problems than larger sized particulate matter.
- **Volatile organic compounds, or VOC**, are organic compounds which, in the presence of nitrogen oxides and sunlight, form ground level ozone. Volatile organic compounds are emitted from many

[2] Major source thresholds are set based on the attainment status of an area of a state with respect to the NAAQS. Depending on whether an area of the state meets the NAAQS, it will be designated as attainment (meets the standards) or non-attainment (does not meet the standards) for a specific pollutant. Most areas in Wisconsin are considered attainment areas.
[3] A list of these air pollutants is available at *http://www.epa.gov/haps/initial-list-hazardous-air-pollutants-modifications*.

processes, often from those that use, inks, fountain solutions, adhesives, coatings, and cleanup or other types of solvents.

- **Nitrogen oxides, or NOx,** are the generic terms for a group of highly reactive gases, all of which contain nitrogen and oxygen in varying amounts. Many of the nitrogen oxides are colorless and odorless. Nitrogen oxides form when fuel is burned at high temperatures, as in a combustion process (e.g., boilers, space heaters, diesel generators).
- **Sulfur dioxide, or SO_2,** belongs to the family of sulfur oxide gases (SOx). Sulfur in printing operations is most commonly found in fuels such as fuel oil, diesel fuel, etc. SOx gases are formed when fuel containing sulfur, such as coal, diesel and fuel oil is burned.
- **Carbon monoxide, or CO**, is a colorless, odorless gas that is formed when carbon in fuel is not burned completely. In combustion processes, the carbon in the fuel is never completely combusted, and a portion becomes CO.
- **Lead** is a metal found naturally in the environment as well as in some manufactured products. Letterpress facilities may have some lead emission from melting lead in the type setting process.
- **Section 112(b) Hazardous Air Pollutants, or Federal HAPs**, are pollutants that EPA has designated as being known or suspected to cause cancer or other serious health effects, such as reproductive effects or birth defects, or adverse environmental effects. Section 112(b) hazardous air pollutants means the federally regulated air pollutants included in the list in section 112(b)(1) of the Clean Air Act as revised by 40 CFR part 63 Subpart C. Examples of HAPs in printing operations include ethylene glycol in fountain solutions, small amounts of xylene in some cleaning solvents, methyl ethyl ketone used in some ink jet printing inks, etc.

When do emissions need to be calculated?

The DNR recommends that before a facility applies for a registration permit, they review the emissions for previous calendar years and estimate the emissions for the coming calendar year, where emissions are adjusted as necessary using the control efficiencies prescribed by the registration permit. Compare these emissions with the emission limits in the table above. Based on the calculations, if the facility will not be able to stay under the registration permit emission limits, this type of permit is not the right permit for the facility.

Can a facility consider control devices when calculating annual emissions?

Yes, as long as the control device is listed in the registration permit (see Question 4). If an emission unit at the facility is covered by an applicable requirement that specifically requires a type of control device not listed, the facility may also use that control device to calculate emissions but only for the emission unit covered by the applicable requirement.

What are the control efficiencies that a facility must use to calculate emissions?

Any control devices that a facility must use to meet the emission limit of the registration permit must meet the minimum overall control efficiency listed in Question 4. One exception is if an applicable requirement specifically requires a different control efficiency. Then, the facility may use that control efficiency in the emission calculations but only for the emission unit subject to the rule-based control efficiency. Another exception is if there are stack test results for thermal or catalytic oxidizers that were completed within the five years prior to the time of application for the registration permit, the facility can use the destruction efficiency for the calculation of the VOC and HAP emissions. A copy of the results will need to be on file in the DNR records to be used for the registration permit emissions calculations.

What happens to the emission limits if the attainment area status of the county where the facility operates changes?

If the attainment status for any pollutant for the area in which the facility is located changes, the emission limit for that pollutant may change. For example, the major source threshold for a moderate nonattainment area for ozone is 100 tons per year of VOC. The threshold for a severe non-attainment area for ozone is 25 tons per year of VOC. If the area in which a facility is located is re-designated from moderate ozone nonattainment to severe ozone nonattainment, the VOC emission limit for the facility would drop from 25 tons per year to 6.25 tons per year. Note that the DNR has time to inform affected sources of impending changes in attainment status for the location of any affected facilities and would assist facilities through such a change.

How does a facility calculate annual emissions?

The *Emission Determination for the Printing Industry Supplement to EPA Guidance Documents* (https://widnr.widen.net/s/6xwswmx9l7/am525), provides assistance to printers in calculating annual emissions that can be used to complete this application. If the facility already submitted an annual Air Emissions Inventory Report to the DNR, the report can be used to help estimate whether or not the emissions have been and will be below the registration permit emission limits. Be aware the control device efficiencies used in the Air Emissions Inventory Report might be higher than what is allowed under the registration permit. For example, there is a large difference between the 92% control allowed for PM_{10} from baghouses in the registration permit and the 99.9% control efficiency given to many baghouses in the air emissions inventory calculations. If the facility has control devices, recalculate the emissions in the inventory, substituting the registration permit control efficiencies for the actual control efficiencies used in the inventory. An overall control efficiency higher than that listed in Section G of the permit or required by an applicable requirement may be used in the emission calculations for thermal and catalytic oxidizers when the facility has demonstrated a higher overall control efficiency through a DNR approved stack test performed within the last five years or as required in s. NR 439.075, Wis. Adm. Code.

If the facility has never submitted an Air Emissions Inventory Report to the DNR, or if the facility has control devices and wants to more accurately estimate emissions for registration permit purposes, follow the steps below.

- Calculate emissions for each pollutant from each emission unit[4] at the facility, except those units listed in Appendix A.
- Similar emission units may be grouped together for emission calculation purposes if they are uncontrolled or use the same type of control device.
- If emissions are controlled by a control device, the facility must use the control efficiency listed in the permit. Annual emissions of all uncontrolled pollutants can be used. Or, if the facility's actual emissions are not known, use the emission limit of an applicable requirement as an estimate of the emissions.
- Actual hours operated during a calendar year, actual production rates for a year or other production or operational data can be used for these calculations. Make sure the facility does not anticipate exceeding these calendar year totals in the future, however. For example, if the facility currently operates one shift per day but would like to increase to two shifts, double the actual production numbers to ensure the facility will qualify for this permit.

[4] An emissions unit is "any part [process equipment, etc.] of a facility which emits or is capable of emitting any air pollutant."

- Choose one of the calculation methods in **a.** through **d.**, below, for each emission unit (or group of emission units) at the facility. If emission factors or other emissions data was developed specifically for the facility operations using the facility's own stack testing information or material analysis, use these emission factors or other data rather than emission factors or other data published by U.S. EPA, safety data sheet (SDS), or trade associations.
- If an emission unit exhausts inside a building, PM_{10} and other pollutants emitted as particles from that unit, do not need to be included in the emission calculations. It can be assumed these emissions settle inside the building.
- Once the emissions from each emissions unit and each group of similar emissions units at the facility have been calculated, add up the emissions of each pollutant from all emissions units at the facility and make sure the estimated future calendar year emissions of each pollutant will not exceed its limit.
- Once the facility is covered under the registration permit, that facility will be required to report the actual annual emissions to the Wisconsin Air Emissions Inventory (AEI) and submit an annual certification of compliance with these emission limits. Facilities that decide to use higher control efficiencies (e.g. 99.9% for a baghouse) in the AEI report instead of the prescribed control efficiency required by the registration permits, shall maintain onsite another set of emission calculations to demonstrate compliance with the calendar year emission limits using the prescribed control efficiencies.

What are the calculation methods?

a. Emission calculation based on the source's actual operating parameters, as shown in the following equation:

$$\mathbf{E = OP \times U_{EF} \times [1\text{-}CE]\}}$$

where:

E = Emissions in tons per calendar year

OP = Operating Parameter as required by the emission factor (e.g., actual hours of operation or number of units produced, or gallons of fuel used)

$\mathbf{U_{EF}}$ = Emission Factor (e.g., pounds of pollutant per hour of operation or number of units produced, or gallons of fuel used)

NOTE: *An "emission factor" is a representative value that relates the amount of a pollutant released to the atmosphere with an activity associated with the release of that pollutant. These factors are usually expressed as the weight of pollutant divided by a unit weight, volume, distance, or duration of the activity emitting the pollutant (e.g., pounds of PM_{10} emitted per ton of coal burned). The best emission factors to use are ones developed at the facility using approved test methods and the facility's own material throughput. If emission testing has not been done at the facility, the facility can find emission factors for many types of emission sources using the U.S. EPA document AP-42 available at the following website (https://www.epa.gov/air-emissions-factors-and-quantification/ap-42-compilation-air-emission-factors#5thed). Trade associations and equipment manufacturers also publish emission factors suitable for estimating emissions.*

CE = Overall Control Device Efficiency (percent expressed as a decimal fraction) as listed in the Registration Permit. No other control device efficiency may be used for CE unless higher control

efficiency is specifically required by an applicable requirement that the emission unit is subject to. If no control device is installed for an emission unit or if the control device is not designed to control a given pollutant, then CE = 0.

b. Another way to calculate the calendar year emissions is to use the applicable emission limitation for the emission unit and multiply by the hours it is expected to operate that year. This method may over-estimate the emissions but will not require the development of emission factors or use control efficiencies that are much lower than the actual control efficiency.

c. A material balance may be used to calculate VOC emissions:

E = [(ax - y - cz) x (1 - d)]/2000 lb/ton

where:

E = the emissions of VOC in tons per year

a = the amount of material entering the process in a month. This is typically gallons ink or pounds of adhesive.

x = the amount of VOC contained in the material. This is sometimes given as a percent by weight or may be given in lb/gallon. Be sure documentation of the VOC content in each material is available, using a signed statement from the supplier, results from an approved test method or the SDS.

y = the amount of VOC incorporated permanently into the product. This includes VOCs chemically transformed in production. It does not include latent VOC remaining in the product that will at some time be released to the atmosphere.

c = the amount of material, if any, leaving the process as waste in a month. This might be unused ink or spent cleaning solvent to be shipped off as hazardous waste.

z = the amount of VOC contained in the material, if any, leaving the process as waste, or otherwise not incorporated into the product and not emitted to the air.

d = the overall control device efficiency (percent expressed as a decimal fraction of 1.0), as listed in the Registration Permit (see Question 4). If there is no control device, d=0.

d. Sulfur dioxide emissions may be determined by measuring the sulfur content of the fuel used and assuming that all of the sulfur in the fuel is oxidized to sulfur dioxide. Natural gas and fuel oil emissions are calculated using U.S. EPA emission factors AP-42, Compilation of Air Pollution Emission Factors (*https://www.epa.gov/air-emissions-factors-and-quantification/ap-42-compilation-air-emission-factors#5thed)* which contains representative emission factors for a variety of industrial categories and processes.

Emissions (lb/hr) = Fuel Volume (CF6 or GAL3) / hour x EF lb pollutant/fuel volume

Where:
CF6 = million cubic feet of gas
GAL3 = 1000 gallons of oil

EF for Natural Gas (NG): Tables 1.4-1 and -2, AP-42, for <100 mmbtu/hr maximum capacity
EF for Fuel Oil (FO): Tables 1.3-1, -2, and -3, AP-42, for #2 fuel oil/distillate fuel oil
Example calculation: SO_2 = 0.3 gal3/yr x 0.21 lb SO_2/gal3** = **0.0639 lb SO_2/yr**

** Fuel oil SO_2 EF based on 0.0015% sulfur = 142 * %S or 142 * (0.0015) = 0.21 lb/1000 gal (lb/gal3)

What if the facility needs more help calculating emissions?

- The SBEAP employs environmental assistance coordinators who can assist small businesses in calculating their emissions. SBEAP's website (*http://dnr.wi.gov/topic/smallbusiness/)* contains additional information on the program as well as contact information.
- The SBEAP developed an Air Pollution Emission Calculation Spreadsheet (*https://widnr.widen.net/s/pb2smbxmxg/sb301*) and other compliance material (*https://dnr.wi.gov/topic/SmallBusiness/Resources/Printers.html)* to help facilities calculate emissions.
- Unsure what emission factor to use for an emission unit at a facility? U.S. EPA maintains a document titled AP-42, Compilation of Air Pollution Emission Factors which contains representative emission factors for a variety of industrial categories and processes.
- Or contact the registration permit coordinator at *DNRamROPSairpermit@wisconsin.gov* for additional help in the facility's determination.

Example Calculation

Shown below is an example emission calculation for a combustion process.

Note that no control device is present, so CE = d = 0:

- **Combustion source**

  Emissions Unit: 90 million BTU per hour boiler (90 MMBTU/hr)

  Fuel: Natural gas

  Heat content: 1,000 MMBTU/million cubic feet of natural gas (1,000 MMBTU/cf6)

  Back up Fuel: #2 Fuel oil

  Heat content: 140 MMBTU/1,000 gallons of #2 fuel oil (140 MMBTU/Mgal)

PM_{10} is calculated as follows:

Natural gas:

The emission factors (0.52 lb/cf6 and 0.2 lb/cf6) are from U.S. EPAs spreadsheet of adjusted emission factors: *natgas_procgas_lpg_pm_efs_not_ap42_032012_revisions.xls*. Total PM_{10} emissions equal the sum of filterable and condensable.

PM_{10}: (0.52 + 0.2) lb/cf6 X 90 MMBTU/hr X cf6/1,000 MMBTU = 0.0486 lb/hr

PM_{10}: 0.0486 lb/hr X 8,760 hr/yr X ton/2,000 lb = 0.21 ton per year (TPY)

#2 Fuel oil:

The emission factors (2 lb/1,000 gal and 1.3 lb/1,000 gal) are from AP-42, Chapter 1, Section 1.3, for Industrial boilers of <100 MMBTU/hr, distillate oil fired. Total particulate matter emissions equal the sum of filterable and condensable, and multiplied by the fraction for PM_{10} (50 percent).

PM_{10}: (2 + 1.3) lb/1,000 gal X 0.5 PM_{10}/PM X 90 MMBTU/hr X 1,000 gal/140 MMBTU = 1.06 lb/hr

PM_{10}: 1.06 lb/hr X 8,760 hr/yr X ton/2,000 lb = 4.65 TPY

During a given calendar year, a facility might use both fuels in the same unit at different times, so the total actual PM_{10} emissions for the year would be determined by taking into account the amount of each fuel actually burned in the unit during the year.

Why does the facility also calculate maximum controlled emissions?

The maximum controlled emissions are used for determining the Class Code used by EPA and DNR to establish compliance and enforcement priorities. Additionally, the maximum controlled emissions are used for determining if an air dispersion modeling analysis is necessary as part of the registration permit eligibility review. For instance, if the maximum controlled emissions exceed 5 ton/yr of PM_{10} or 0.2 ton/yr of Pb, an air dispersion modeling analysis will be required. Refer to Question 7 for more information on air quality modeling.

How can a facility calculate the maximum controlled emissions?

First, a facility needs to determine which emission units to include in their calculation. The emission units listed in Appendix A do not need to be included. Also, facilities do not need to include emissions from general building ventilation. If a facility has PM_{10} coming off a process line that is vented to the inside of the building, the facility does not need to determine how much is emitted from general building ventilation. Note: Roof vents placed specifically to vent air emissions from processes are not considered general building ventilation and are considered stacks.

Second, facilities need to calculate the maximum **hourly** emissions of criteria pollutants from all the other emission units at the facility. This is determined by using the maximum rated capacity and either emission factors published by U.S. EPA, the equipment manufacturer, trade associations or from stack testing data.

Third, if the facility used a control device on the emission unit to control emissions of PM_{10}, the facility may use the overall control efficiency to reduce the maximum **hourly** emissions. These are the maximum controlled hourly emissions. Only control devices listed in the permit (see Question 4), or listed in an applicable requirement that the emission unit is subject to, may be used in this calculation.

Finally, the facility needs to calculate the **annual** maximum controlled emissions. Multiply the maximum controlled hourly emissions by 8,760 hours per year to obtain the annual emission rate. If it is not physically possible to operate 8,760 hours per year, the facility is allowed to take into consideration realistic operating scenarios. For example, if the facility operation is a batch process that requires a certain amount of down time to change out batches or equipment, the facility may also consider this when determining the maximum hours of operation. A written copy of how the **annual** maximum controlled emissions were calculated and a justification of the hours per year used, if less than 8,760 hours, must be retained by the facility.

What must a facility do if the emissions are over either of the annual maximum controlled emissions thresholds?

If the annual maximum controlled emissions from the facility are greater than or equal to five tons per year of PM_{10}, or greater than 0.2 tons per year of lead, then air quality modeling must be performed by the facility. The facility must Complete Part 1 of the Modeling Assessment Form 4530-156A, available by link in the Registration Permit Application, and Complete and submit Form 4530-156A with the signed registration permit application. Any application requesting source specific conditions may require air quality dispersion modeling. The DNR performs required modeling analyses for minor source permit applications. See Air Dispersion Modeling Guidelines (https://widnr.widen.net/s/kfnnpbw2js/am528) for more information on when a modeling analysis must be performed for source specific permits.

Finally, if the stacks do not meet the registration permit stack requirements, the facility will be required to provide air quality modeling results for all pollutants at the facility. Refer to Question 7 for more information on air quality modeling and which emissions sources and pollutants will need to be modeled to provide modeling results using Part 1 of the Modeling Assessment Form 4530-156A.

What if a facility needs help calculating maximum controlled emissions?

If a facility needs assistance answering this question, contact the registration permit coordinator at *DNRamROPSairpermit@wisconsin.gov* for additional help.

6. Hazardous Air Pollutants

Question 6:

Does your facility emit any regulated hazardous air pollutants (HAPs)? ☐Yes ☐No

- If you answer "No", go on to Question 7.
- If you answer "Yes", list the pollutant and its expected facility-wide actual emissions and maximum controlled emissions in the table or comment section below:

Hazardous Air Pollutant (HAP)	CAS Number	Federal HAP[5]	Non-exempt State HAP	Stack Height (ft)	Vertical and Unobstructed Stack(s)	Actual Emissions		Maximum Controlled Emissions	
						(lb/hr)	(lb/yr)	(lb/hr)	(lb/yr)
		☐Yes ☐No	☐Yes ☐No		☐Yes ☐No				
		☐Yes ☐No	☐Yes ☐No		☐Yes ☐No				
		☐Yes ☐No	☐Yes ☐No		☐Yes ☐No				
		☐Yes ☐No	☐Yes ☐No		☐Yes ☐No				
		☐Yes ☐No	☐Yes ☐No		☐Yes ☐No				
		☐Yes ☐No	☐Yes ☐No		☐Yes ☐No				
		☐Yes ☐No	☐Yes ☐No		☐Yes ☐No				
		☐Yes ☐No	☐Yes ☐No		☐Yes ☐No				
		☐Yes ☐No	☐Yes ☐No		☐Yes ☐No				
		☐Yes ☐No	☐Yes ☐No		☐Yes ☐No				
		☐Yes ☐No	☐Yes ☐No		☐Yes ☐No				
		☐Yes ☐No	☐Yes ☐No		☐Yes ☐No				
Total of Federal HAPs =									

ADDITIONAL INFORMATION: *The ROPC caps emissions of each federally regulated Hazardous Air Pollutant (HAP) to 10,000 pounds per year and caps the total of all federally regulated HAPs combined to 25,000 pounds per year. If you use a control device to meet an emission cap, you must use the control efficiencies listed in Question 4, the control efficiency required in an applicable standard, or the alternate control efficiency as allowed under ROPC. Maximum controlled emissions are calculated using the maximum hourly capacity of the equipment and assuming operation 8,760 hours per year. Realistic operating scenarios may be considered in lieu of using 8,760. Include a clear explanation of calculation methods with your application.*

State HAPs are listed in chapter NR 445, Wis. Adm. Code, http://docs.legis.wisconsin.gov/code/admin_code/nr/400/445. The list of federal HAPs can be found at https://www.epa.gov/haps/initial-list-hazardous-air-pollutants-modifications. For additional information on calculating your facility-wide annual emissions, visit DNR's Small Business Environmental Assistance Program website at https://dnr.wi.gov/topic/SmallBusiness/.

---

[5] A list of these air pollutants is available at https://www.epa.gov/haps/initial-list-hazardous-air-pollutants-modifications.

Use the comment section below to indicate any special circumstances.

What does this question mean?

More information on the state HAPs tables are available at the DNR's air toxic and mercury webpage (*http://dnr.wi.gov/topic/airquality/toxics.html)*. Appendix D contains the list of federally regulated HAPs included in s. 112(b) of the Clean Air Act. To find a spreadsheet that includes both state and federal HAPs specifically look for the Combined spreadsheet tool tab and the Excel spreadsheet link (*https://dnr.wi.gov/topic/AirQuality/documents/CombinedNR445RevTables.xls*) on the page.

For state HAPs, exclude any that are generated by combustion of group 1 virgin fossil fuels (e.g., natural gas, liquid petroleum gas, distillate fuel oil, gasoline and diesel fuel) or other exempt emissions listed in NR 445.

Include the stack information (e.g., height, vertical and unobstructed) for those that are non-exempt state HAPs. An "unobstructed stack" means one that does not block the vertical flow of pollutants while the process is in operation. A diagram of unobstructed stack configurations is shown in the fact sheet "Modeling Emissions for Air Pollution Permits", *SB-116*.

In the event a facility has obstructed or non-vertical stacks or non-exempt potential fugitive emissions from a printing press) of HAPs. The facility then must calculate the total non-exempt potential emissions of a HAP for the entire facility and compare the result to the corresponding value listed in Table A of NR 445 for the pollutant and the particular stack height category. There are four categories of stacks in the rule (i.e., stacks<25 ft, 25 ft<stacks<40 ft, 40 ft<stacks<75 ft, and stacks>75 ft).

The total non-exempt potential emissions of a HAP, or $\mathbf{E_{Tot}}$, is calculated as follows:

$$\mathbf{E_{Tot} = E_{Unobstructed} + 4 \times (E_{Obstructed} + E_{Fugitive})}$$

Where:

E_{Tot} = Total emissions of a HAP for the entire facility, within each stack height category listed in the rule.

$E_{Unobstructed}$ = Total emissions of a HAP coming from all stacks that are vertical and unobstructed.

$E_{Obstructed}$ = Total emissions of a HAP coming from all stacks that are not within 10 degrees of being vertical or are obstructed (e.g., they have "rain hats", etc.) while the process is operating.

$E_{Fugitive}$ = Fugitive emissions of a HAP that are not emitted through vents, pipes, flues or stacks, or similar openings.

Refer to Question 5 for additional information on how to calculate emissions.

---

7. Emissions Sources and Stack Configuration for Potential Air Dispersion Modeling

---

Question 7:

Do you have heatset web offset printing presses or letterpresses, or do you burn distillate fuel oil at this facility?

- If you answer "No", go on to Question 8.
- If you answer "Yes", please answer the following additional questions about the facility's emission rates and stacks configuration.

a. Emission rates:

i.	**Do PM_{10} emissions from any stack venting a heatset web offset press exceed 0.5 lb/hr?**	☐ Yes ☐ No
ii.	**Are the maximum controlled PM_{10} emissions from all heatset web offset presses and combustion units combined at the facility greater than 5 tons/year, excluding emissions from the heatset web offset presses that emit less than 0.5 lb/hr?**	☐ Yes ☐ No
iii.	**Do the maximum controlled Pb emissions from all letterpresses combined exceed 0.2 tons per year?**	☐ Yes ☐ No

b. Stacks configuration:

i.	**Are any stacks shorter than nearby buildings?**	☐ Yes ☐ No
ii.	**Do any stacks discharge horizontally or in a downward direction?**	☐ Yes ☐ No
iii.	**Do any stacks have rain hats or other devices that obstruct air flow?**	☐ Yes ☐ No

ADDITIONAL INFORMATION: *If you answer "Yes" to any of the Questions from 7.a.i. to 7.a.iii., an air dispersion modeling analysis is required as part of eligibility review for the ROPC to demonstrate that your facility emissions will not cause or exacerbate a violation of the ambient air quality standards. For purposes of answering these questions, the emission units listed in Attachment 3 can be excluded.*

If modeling analysis is required and you answer "No" to all Questions from 7.b.i. to 7.b.iii, you can request the department to conduct the analysis at no charge because your facility meets the preestablished stack configuration of the ROPC. This preestablished stack configuration requires that emissions are vented from unobstructed discharge points that are within 10 degrees of vertical. Stacks that are closed when the process is not operating, but that are open when the process is operating are considered to be unobstructed. Stacks must be taller than any building that influences the dispersion of emissions from the stack. A building is considered to influence the dispersion of emissions if the stack is located within a circle around the building, the radius of which is 5 times the height of the building. Further explanation of the stack and building influences is found in the ROPC Application Guidebook, publication number AM-582 (https://dnr.wi.gov/topic/AirPermits/Registration.html#tabx3).

If modeling analysis is required and you answer "Yes" to any of the Questions in 7.b.i. to 7.b.iii, the facility must conduct the analysis and attach the results to this permit application because the facility does not meet the preestablished stack configuration. If your facility had an air quality analysis done for a previous permit review and you have not made changes to emission rates or stacks since the analysis was performed, you can report those results.

Use Form 4530-156A (https://dnr.wi.gov/files/PDF/forms/4500/4530-156A.pdf) for either requesting an air dispersion modeling analysis or reporting the results of your analysis.

What does this question mean?

A facility will meet the registration permit stack requirements if all stacks at the facility other than stacks that are general building ventilation or stacks venting the emission units listed in Appendix A can meet the following:

- The stacks at the facility must be taller than all buildings on which they are located and all buildings that could significantly influence the stacks' emissions as they spread out from their exhaust points into the surrounding area (see example below for how this is determined). A building is considered to influence a stack's emissions if the stack is located within five building heights of that building.
- All stacks at the facility must discharge upwards (within 10 degrees of vertical).
- All stacks at the facility must discharge to the atmosphere without alteration of flow due to an obstruction (e.g., rain hat) while the process they serve is operating.

See the following diagram for illustration.

Figure 7.1 Stack heights Relative to Nearby Buildings (Side Perspective-- not to scale)

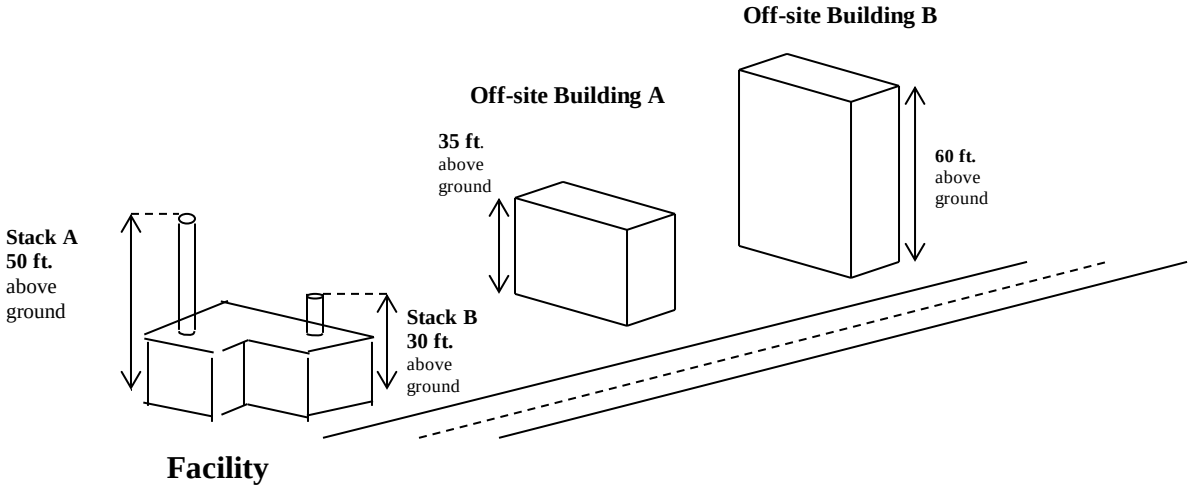

Figure 7.2 Stack heights Relative to Nearby Buildings (Top View-- not to scale)

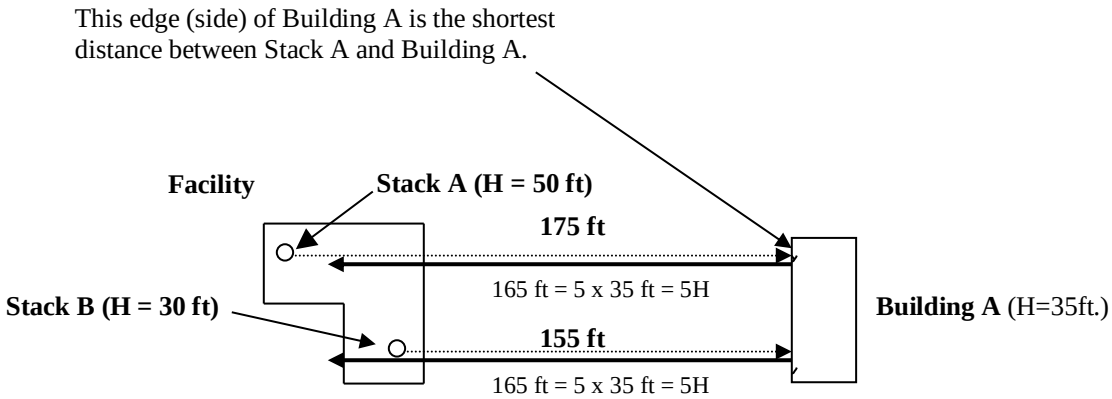

In the example depicted in Figures 7.1 and 7.2, all facility stacks and nearby buildings should be individually evaluated in all combinations by determining the nearest point on a given building's perimeter (e.g. Building A) to the stack being evaluated (e.g. Stack A) and then checking whether the distance between that point and the stack is less than five times the building's (e.g. Building A) height (**the "5H-range"**). In this example, only the 30-foot stack at the facility is within the 5H-range of Building A. Since Building A has a height of 35 feet, the height of Stack B would have to be raised to higher than 35 feet, in order to answer YES to Question 7.b.i.

To further illustrate other possible cases, here are several variations of this example:

- Consider the possibility that Building B (H = 60 ft) was located close enough to the facility that the 50-foot stack was within the 5H-range for Building B (300 ft). In that case, both stacks would have to be raised above 60 feet in order to answer YES to Question 7.b.i.
- Consider the case where Building A had a height of 25 feet. In that case, the 30-foot Stack B would be greater than that building's height and, if all other facility stacks meet the 5H-range test for all nearby buildings, then answer YES to Question 7.b.i.
- Consider the case where Building A was located on the facility's property and was owned by the facility. Ownership of buildings and whether the locations of buildings are on or off the facility's property are not taken into consideration. In other words, all buildings, whether owned by the facility or not and whether located on the facility's property or not, must be evaluated if they are possibly within the 5H-range for one or more facility stacks.
- There may be buildings all around a facility which require evaluation, rather than just a few along a single street, and in that case their 5H-ranges would also require comparison to the facility's stack locations.
- If there are no buildings in the usual sense, but there are large structures on or off the facility, their heights and proximity to facility stacks must be evaluated if they can be expected to influence the dispersion of emissions from a stack.
- Finally, consider the case where the facility has a stack attached to the side of its own building, but that stack is not taller than that building. In this case, the stack height must be raised above the building height, in order to answer YES to Question 7.b.i., assuming that no other nearby buildings would require the stack to be raised even higher.

Again, some stacks do not need to be considered when determining if the facility meets the stack requirements. These include stacks whose only purpose is for general building ventilation and stacks that serve emission units listed in Appendix A of this Guide**.**

What if any one of the facility's stacks does not meet the stack requirements?

If any of the stacks at the facility do not meet the requirements listed above, the facility may still be able to qualify for coverage under the registration permit if the emissions are modeled. The facility may use air quality modeling performed previously as part of issuance of an operation permit or perform a computer modeling analysis to determine whether the predicted impact from the facility meets NAAQS.

Can an existing operation permit be used to determine if the stacks meet the registration permit stack requirements?

If the facility was modeled by the DNR for issuance of a facility wide operation permit, the modeling results can be used to show that the facility meets NAAQS. As part of the evaluation of whether existing permits can be revoked, the DNR will perform a review of the NAAQS. If the facility's emission rates, as allowed under the registration permit at current stack configurations are not protective of the NAAQS, the existing facility-wide permit will not be revoked and the facility will not be eligible for coverage under this permit. If facility-wide modeling data is available for the entire facility, the DNR will indicate that current stack configurations and allowable emissions rates are protective of the NAAQS. Complete Part 1 of the Modeling Assessment (Form 4530-156A *https://dnr.wi.gov/files/PDF/forms/4500/4530-156A.pdf*) and submit it with the signed copy of the registration permit application.

Should a facility do its own dispersion modeling to determine if the stacks meet the NAAQS?

A facility must perform a more refined modeling analysis using the current U.S. EPA-accepted refined dispersion model. The refined model is a complex model that typically requires the help of a trained consultant. The Wisconsin DNR's modeling website has information on this *http://dnr.wi.gov/topic/airpermits/modeling.html*). Whether a facility runs the model themselves or hires a consultant to run the dispersion model, the facility will need to make sure to use the correct emission rates in the modeling analysis.

Which pollutants does a facility need to include in the modeling analysis?

First a facility needs to figure out which emission units and pollutants to include in the modeling analysis. The emission units listed in Appendix A do not need to be included. Facilities do not need to include emissions from general building ventilation. The modeling required in this section is only for PM_{10}, sulfur dioxide, nitrogen oxide, carbon monoxide and lead.

If the maximum controlled facility-wide emissions of PM_{10} is less than five tons per year, and lead is less than 0.2 tons per year, the facility does not need to provide modeling results for that pollutant. If the maximum controlled emissions of all pollutants from any single emission unit are all less than one ton per year, that emission unit does not need to be included in the model. Only one of these aforementioned exemptions can be used for the modeling analysis.

To calculate the maximum controlled annual emissions, first calculate the maximum controlled hourly emissions as described below. Then multiply the maximum controlled hourly emissions by 8,760 hours per year to obtain the annual emission rate. If it is not physically possible to operate 8,760 hours per year, facilities are allowed to take into consideration realistic operating scenarios. For example, if the operation is a batch process that requires a certain amount of down time to change out batches or equipment, the facility may use fewer operating hours per year. A written copy of how the annual

maximum controlled emissions were calculated and a justification of the hours per year used, if less than 8,760 hours, must be retained by the facility.

How does a facility calculate the emission rates to use in the model?

The maximum controlled hourly emission rates must be used in the model. To calculate the maximum controlled hourly emissions of air pollutants, use the maximum rated capacity of each unit and either emission factors published by U.S. EPA, the equipment manufacturer, trade associations or emission factors developed from stack testing data at the facility. Refer to Question 5 for more information on ways to calculate the facility's maximum hourly emissions.

If the facility uses a control device on the emission unit to control emissions of PM_{10}, use the control efficiency to reduce the maximum hourly emissions. These are the maximum controlled hourly emissions.

How does a facility show that its modeling analysis is adequate to demonstrate protection of the NAAQS?

Facilities will need to print and fill out Part 1 of the Modeling Assessment Form 4530-156A located on DNR's Air Permit and compliance Forms webpage and provide it with the signed copy of the registration permit application. Facilities will also need to retain either an electronic or paper copy of the modeling analysis input and output on site and available for inspection for the duration of the facility's coverage under the registration permit.

What if a facility needs more assistance in answering this question?

Contact the registration permit coordinator at *DNRamROPSairpermit@wisconsin.gov* for additional help in determining if the facility's stacks meet the stack requirements of the registration permit or for direction on determining how to get an air quality modeling assessment done for the facility.

---

8. Source-specific Organic Compound Limits

Question 8:

Does the facility have records that show all process lines emit less than 15 pounds of organic compounds in any day? ☐Yes ☐No ☐Not Applicable

- If you answer, "Yes," you have completed the application.
- If your facility does not operate any process lines or does not emit organic compounds from process lines, answer "Not Applicable" and you have completed the application.
- If you answer "No" indicate the limit that you plan to meet for each process line in the following table:

Election of Organic Compound Limit for Control of Organic Compounds for each Process Line				
Process Line/Press ID	**Description**	**Organic Compound Limit (Check the column for the limit you plan to meet)**		
		RACT (Indicate the Rule)	**85% control**	**ROPC Standard LACT**
		☐	☐	☐
		☐	☐	☐
		☐	☐	☐
		☐	☐	☐
		☐	☐	☐

ADDITIONAL INFORMATION: *"Process line" means one or more actions or unit operations which must function simultaneously or in sequence in order to manufacture or modify a product. For example, a press or coating line and its associated on-machine and off-machine cleaning operations is considered to be a process line. Facilities shall meet one of the control requirements for organic compounds emissions in the following order of priority:*

(1) Applicable RACT - Meet a RACT in sections NR 422.14 to NR 422.145, Wis. Adm. Code (facilities subject to a RACT shall demonstrate compliance with those requirements and do not have the option for using other compliance demonstrations);

(2) 85% Control - Apply 85% control of organic compounds for each process line;

(3) ROPC Standard LACT - Adopt the ROPC standard latest available control technique and operating practices demonstrating best current technology (LACT) for each process line (i.e. cap organic compound emissions from each process line to 10 tons per year); or

(4) Elected RACT - If the printing process line meets the specific applicability requirements in any section from ss. NR 422.14 to 422.145, Wis. Adm. Code, but is not subject to that section based on

an exemption, the facility may elect to meet the emission limitations in ss. NR 422.14 to 422.145. Geographic location or emission rates are not considered in determining if a process line meets the specific applicability requirements. The intention is to allow facilities that are in the same industrial group as those for which the section was written to use the conditions in that section.

By approving coverage for a facility under a registration permit, the department has approved the organic compound limit elected by the facility for each process line.

What does this question mean?
LACT = Latest Available Control Techniques and operating practices
RACT = Reasonably Available Control Technologies

What is LACT?

LACT applies to facilities that emit volatile organic compounds and, under s. NR 424.03(2)(c), Wis. Adm. Code, cannot meet the general requirement of 85 percent control of organic compounds. Chapter NR 424 applies if the facility's processes are not subject to other specific organic compound emission limits found in chs. NR 419, NR 420, NR 421, NR 422, and NR 423 (called RACT rules). LACT is usually a case-by-case determination. The DNR has included a generalized LACT into the registration permit so that more facilities can qualify for coverage.

RACT rules established control requirements for certain industries with emissions of volatile organic compounds in an effort to reduce ozone emissions in counties that did not meet national ambient air quality standards. Most RACT rules have applicability thresholds ranging from 3 tons per year to 100 tons per year. Facilities may have elected to restrict their emissions below an applicability threshold in a construction and/or operation permit to avoid having to meet the RACT requirements. After revoking an existing permit with a RACT avoidance limit, the facility will be required to meet the RACT limit that applies. In this case, a facility is still eligible for coverage under the registration permit. More information about VOC RACT rules is available on DNR's VOC RACT Rules for Specific Industries factsheet.

How will the status for obtaining a registration permit be affected if the facility already has a permit with a LACT determination?

If the facility already has a permit with a LACT determination under s. NR 424.03(2)(c), Wis. Adm. Code, previous LACT determination will be revoked along with the existing air permits. However, the facility may still be eligible for coverage under a registration permit. The facility shall meet the requirements of s. NR 424.03 by either controlling organic compound emissions by 85%, or by limiting the emissions from the affected process line to 10 tons organic compounds per year and meeting the LACT contained in the registration permit (refer to Section A.7. of the registration permit). The facility may also elect to meet a specific VOC limit in chs. NR 422.14 - 422.145.

What if a facility needs more assistance in answering this question?

Contact the registration permit coordinator at *DNRamROPSairpermit@wisconsin.gov* for additional help in determining if the facility's stacks meet the stack requirements of the registration permit or for direction on determining how to get an air quality modeling assessment done for the facility.

Wisconsin Department of Natural Resources
Air Management Program
Box 7921- AM/7
Madison, WI 53707
PHONE 608-266-7718 • FAX 608-267-0560

APPENDIX A – Emission Units Not Subject to Certain Requirements

1. Convenience space heating units with heat input capacity of less than 5 million Btu per hour that burn gaseous fuels, liquid fuels, or wood
2. Convenience water heating
3. Maintenance of grounds, equipment, and buildings, including lawn care, pest control, grinding, cutting, welding, painting, woodworking, general repairs, and cleaning, but not including use of organic compounds as cleanup solvents
4. Boiler, turbine, generator, heating, and air conditioning maintenance
5. Pollution control equipment maintenance
6. Internal combustion engines used for warehousing and material transport, forklifts and courier vehicles, front end loaders, graders and trucks, carts, and maintenance trucks
7. Fire control equipment
8. Janitorial activities
9. Office activities
10. Fuel oil storage tanks with a capacity of 10,000 gallons or less
11. Stockpiled contaminated soils
12. Demineralization and oxygen scavenging of water for boilers.
13. Purging of natural gas lines.
14. Particulate matter from natural gas combustion in press dryers, control device, and other heating units so long as fuel usage or heat input capacity caps in Attachment 1 are met.
15. Aerosol cans
16. Pad printing
17. Pre-press equipment, such as: photo-processing, typesetting, or image-setting equipment;
18. Proofing systems utilizing water-based, ink jet, dry toner, or dye sublimation or proof press designed to evaluate product quality;
19. Plate-making equipment or screen preparation activities utilizing water-based developing solutions;
20. Equipment used to make blueprints.
21. Cold cleaning manual parts washers with less than 10 square feet of surface area.
22. Dry toner or other digital presses that apply water-based inks.
23. Substrate finishing activities which involve paper folding, cutting, folding, trimming, die cutting, embossing, foil stamping, drilling, saddle stitching, sewing, perfect binding, vacuum forming or other activities that do not generate VOCs and whose particulate emissions are vented inside the facility.
24. Adhesive application activity involving hot melt, extrusion, catalyzed solvent-less, or water-based adhesives.
25. Pneumatic system for collecting paper/film/paperboard scrap from cutting operations.
26. Any emission unit, operation, or activity that has, for each air contaminant, maximum controlled emissions that are less than the level specified in Table 3 of ch. NR 407, Wis. Adm. Code. Multiple emissions units, operations, or activities that perform identical or similar functions shall be combined for the purposes of this determination.
27. If the maximum controlled emissions of any air contaminants listed in Table 3 of ch. NR 407, Wis. Adm. Code, from all emission units, operations or activities at a facility are less than 5 times the level specified in Table 3, for those air contaminants, any emission unit operation or activity that emits only those air contaminants.