WISCONSIN DEPARTMENT OF NATURAL RESOURCES

Registration Permit Application Guidebook

For facilities applying for a Type G registration permit

Air Management Program

Publication Number: AM-569-2023

Table of Contents

PART I - INTRODUCTION

This document contains basic registration permit information to assist facilities in determining if a registration permit is the correct choice for the facility. The document will familiarize facilities with all steps in the registration permit application process, the differences between a registration permit and traditional permits, and expectations once a facility is covered under a registration permit. The specific statutes and rules interpreted by this guide are s. 285.60(2g), Wis. Stats., and ss. NR 406.17 and NR 407.105, Wis. Adm. Code.

There are four types of registration permits: Type A, Type B, Type C and Type G (G01 and G02). This application guide will address only the Type G Registration Permits.

- Type A allows emissions up to 25% of the major source threshold for federally regulated hazardous air pollutants (HAPs) and criteria air pollutants: volatile organic compounds (VOCs), particulate matter (PM), carbon monoxide (CO), lead (Pb), nitrogen oxides (NO_x), and sulfur dioxide (SO_2).
- Type B allows emissions up to 50% of the major source threshold for federally regulated HAPs and criteria air pollutants.
- Type C is specific for printing facilities and allows emissions up to 25% of criteria pollutants and up to 50% of the major source threshold for federally regulated HAPs.
- Type G includes permits G01 and G02 which are specific for facilities intending to achieve or having achieved Tier 2 status in the Green Tier Program and allow emissions up to 80% of the major source threshold for HAPs and criteria air pollutants.

The major source threshold is dependent upon the attainment and nonattainment status of each area in the state. For most areas in the state, the current (as of August 2022) threshold is 100 tons per year for each criteria pollutant, 10 tons per year for each HAP and 25 tons per year for all HAPs combined. For nonattainment areas, see Page 21 for more details on the areas and the thresholds, or go to the Wisconsin Department of Natural Resources' (DNR) Nonattainment webpage (https://dnr.wisconsin.gov/topic/AirPermits/Nonattainment.html).

More information regarding all registration permit types can be found on DNR's Registration permit webpage (*https://dnr.wi.gov/topic/AirPermits/Registration.html).*

1. What are registration permits?

The registration operation permit (ROP) is a standardized air pollution control operation permit which authorizes facilities with low emissions to operate. The ROP places a limit on the amount of air pollution a facility can emit and includes the methods that must be used to demonstrate compliance with the permit limits. Coverage under the ROP can also exempt a facility from construction permitting. In most cases, a covered facility can make changes and add equipment without obtaining a construction permit so long as the facility continues to emit below the ROP limit and meet the eligibility requirements of the ROP. The exemption to this case is the Type G registration permit which allow the permittee to have source-specific conditions under the permit coverage, but those conditions shall be originated from a source-specific construction permit.

Issued along with the Types A, B, C and G02 ROP is a companion registration construction permit (RCP). The companion RCP is nearly identical to the ROP. The RCP ensures a smooth and legal transition from the DNR's traditional permit program to the registration permit program. All facilities that apply for coverage under the Types A, B, C and G02 will also apply for coverage under the companion RCP. The Type G01 permit is a stand-alone registration construction permit. The same eligibility

requirements, compliance requirements, and procedures for obtaining coverage apply to both RCPs and ROPs. The remainder of this document refers to registration permits.

2. What are the pros and cons of a registration permit?

A registration permit has several advantages over a "traditional" operation permit. These advantages include:

- Time-savings:
  - Simplified permit application process
  - Quick permit decision – 15 days [1]
  - Permit does not expire and never has to be renewed [2]
- Money-savings:
  - No construction permit fees; exempts facilities from construction permitting so long as the construction does not result in emissions that exceed the limits or trigger a rule that makes the facility ineligible for the registration permit. [3]
  - No revision or renewal or construction permit applications to submit [4]
- Flexibility:
  - More flexibility in choosing methods for demonstrating compliance
  - Changes can be made immediately without obtaining a construction permit [4]
  - Safe Harbor - Protects facilities that make reasonable efforts to identify and comply with applicable state air pollution regulations from enforcement. (See Section 5 for additional details.)

A drawback of a registration permit is that it does not list all state and federal air pollution regulations that apply to a facility. The DNR has developed tools to assist facilities in identifying and complying with applicable air pollution regulations. Significant effort and facility staff time may be required to identify which requirements apply and to determine how the facility will demonstrate compliance. If the facility has a permit that was issued by the DNR in the past, that document would contain pertinent information on applicable requirements and compliance demonstration methods.

3. How can a facility get a registration permit?

Obtaining a registration permit is an easier and more streamlined process than obtaining a traditional permit. The process includes:

A. Reviewing the registration permit application questions and determining if the facility is likely to qualify for a registration permit. Part II of this guide contains additional help on answering those questions. The registration permits section of the DNR's website (*https://dnr.wi.gov/topic/AirPermits/Registration.html)* also provides registration permit compliance

[1] Additional time is necessary for facilities with existing air permits or facilities applying for source-specific permit conditions under the Type G Registration Permit.
[2] The authorization to construct, modify, replace, reconstruct and initially operate under the Type G01 RCP expires eighteen (18) months from the date of coverage.
[3] Source-specific construction permits that might be issued along with the Type G registration permits are subject to New Source Review (NSR) fees.
[4] Facilities interested in having source-specific conditions along with the Type G registration permits coverage might need to apply for the revision of a source-specific construction permit or apply for a new source-specific construction permit.

guidance to explain how to take advantage of the benefits and fulfill the obligations of coverage under a registration permit.

B. Some registration permit application questions may require additional work and effort by the facility before the facility is ready to apply:

i. Estimating annual emissions – A facility must be able to submit an estimate of the annual emissions of criteria pollutants and HAPs. Assistance with calculating emissions is available under the air section on Wisconsin's Small Business Environmental Assistance Program (SBEAP) webpage (*http://dnr.wi.gov/topic/smallbusiness/)*.

ii. Air Quality Modeling – Facilities that emit particulate matter less than 10 microns (PM_{10}), nitrogen oxides (NO_X), sulfur dioxides (SO_2) and carbon monoxide (CO) may have to either submit information to the DNR so air quality modeling can be performed or provide modeling results to ensure the emissions will meet their respective National Ambient Air Quality Standards (NAAQS). Go to Question 7 in Part II of this guide for information on calculating the facility's maximum controlled emissions. If the emissions are over 5 tons per year of PM_{10}, over 25 tons per year of either NO_X or SO_2, or over 50 tons per year of CO the facility is required to fill out and submit the Modeling Assessment form available on DNR's Air Permit and Compliance Forms webpage (https://dnr.wisconsin.gov/topic/AirPermits/Forms.html).

iii. Stack Requirements and Air Quality Modeling – The registration permit requires stacks at the facility be vertical, without obstructions such as rainhats, and taller than nearby buildings. If stacks at the facility do not meet registration permit stack requirements, the facility can still qualify for the registration permit by using air quality modeling results to show that emissions from the stacks meet all the air quality standards. Use the Modeling Assessment form 4530-156A available on DNR's Air Permit and Compliance forms webpage (https://dnr.wisconsin.gov/topic/AirPermits/Forms.html) to provide air quality modeling results demonstrating that the facility emissions meet NAAQS. (See Question 8)

C. Go to the ROP-G tab on the Registration Permit Options webpage, scroll down and click on the Type G ROP Application Form 4530-185. Answer the questions, complete the facility information and, if necessary, the Modeling Assessment. Submit the completed application and any attachments using either Option 1 or Option 2 below:

Option 1:

Email an ELECTRONIC COPY* to DNRAMAirPermit@wisconsin.gov.

*Applications must be signed by the responsible official for the source. If submitting an electronic application, the DNR will send an email with instructions for e-Signing or submitting an ink signature upon receipt of the electronic application. A photocopied or scanned signature does not meet the DNR's signature requirements. The DNR will not process an application until the signature is received.

OR

Option 2:

Mail the original copy of all materials with ink signature to:

WISCONSIN DEPARTMENT OF NATURAL RESOURCES
AIR MANAGEMENT PROGRAM

Attn: Permits
P.O. Box 7921
MADISON, WI 53707-7921

Within 15 business days of receiving the complete signed application, the DNR will notify the facility of its decision on whether to grant coverage to the facility under the registration permit. When applying for registration permit coverage, the facility is also requesting revocation of any existing permits issued to the facility. The revocation step will add time to the review. If the facility has existing permits, the application will be declared incomplete until a notification is mailed to interested parties and posted on the DNR's public notice website and either a 14-, 21-, or 30-day waiting period has passed. The waiting period for revocation of construction permits is 14 days, state operation permits is 21 days and Title V operation permits is 30-days. Existing permits will remain active until the registration permit coverage is approved. Facilities interested in obtaining source-specific conditions along with the registration permit coverage may need to apply for a new source-specific construction permit or the revision of an existing source-specific construction permit.

4. Are there continuing obligations under the registration permit?

Facilities should be aware of other considerations that may result after being covered under the registration permit:

- Permits and/or orders that were previously issued to the facility may be revoked when the facility applies for coverage under the registration permit. Specific conditions in these permits will also be revoked, unless the facility has asked to retain certain source-specific conditions that are allowed to be included in Part Ib of the Type G registration permits.
    - An example is the Latest Available Control Technology (LACT) requirement. If the facility emits organic compounds and is subject to s. NR 424.03, Wis. Adm. Code, the facility may have a LACT determination and requirements in an old permit that are specifically tailored to the facility. When the ROP coverage is granted, the facility will be required to either control emissions by 85 percent, follow the LACT contained in the registration permit, or continue following the LACT included in the old permit which will be included in Part Ib of the Source-Specific Section of the Type G registration permits.
    - Another example would be if a permit included a limit on volatile organic compounds (VOCs) to avoid a Reasonably Available Control Technology (RACT) limit in ch. NR 422, Wis. Adm. Code. That limit will no longer be in a permit and the facility must comply with the RACT VOC limits that apply to their coating operations.
- Once covered under the registration permit, the facility must continue to meet all applicable air pollution emission limitations and requirements in chapters NR 400 – NR 499, Wis. Adm. Code and all applicable federal requirements, even though they are not explicitly listed in the registration permit.
- Facilities are required to monitor and record operation and emissions related data as specified in the Registration Permit and as required to demonstrate compliance with all applicable state and federal air pollution regulations.
- Facilities are required to submit an annual compliance certification and annual monitoring report to address all permit requirements by March 1, of every year after the first calendar year of coverage under the registration permit that:
    - Certifies compliance with the terms and conditions of the registration permit as well as all other applicable state and federal air pollution regulations; and

  - Provides a summary of monitoring conducted at the facility.

  A template will be available for Type G registration permits under the Compliance tab on the Air Permit and Compliance website (*http://dnr.wi.gov/topic/Airpermits/forms.html*) that when submitted will fulfill both the annual compliance certification and monitoring report requirements.

- Facilities covered under a registration permit are required to report emissions to the Wisconsin Air Emissions Inventory if emissions exceed the reporting thresholds in ch. NR 438, Wis. Adm. Code. If emissions are less than reporting thresholds, the facility must submit an under-threshold notification (UTN) to the DNR. Either the Air Emissions Inventory report, or the UTN, is due by March 1 each calendar year. An extension of this deadline until March 15 may be requested by the permittee and approved by the DNR.
- If reporting emissions is required under ch. NR 438, Wis. Adm. Code, **a certification is also due** at the end of June every year; this certification differs from the permit specific annual compliance certification and monitoring report due at the beginning of March.
- If facilities use pollution control devices such as baghouses, scrubbers and cyclones, they must meet the control efficiencies listed in the registration permit, and they must use those efficiencies to calculate their emissions for demonstrating compliance with the registration permit emissions limit. If an emission unit is subject to an applicable limitation that specifically requires a different control efficiency, then the facility may use that control efficiency to calculate emissions but only for the emission unit covered by the requirement. Facilities covered by the Type G registration permits can apply for source-specific conditions, Part Ib, which could include source-specific control efficiencies that shall be met instead of the control efficiencies listed in the general conditions, Part Ia, of the registration permit.
- Once covered under the registration permit, changes can be made to the facility without having to obtain a construction permit, as long as the facility continues to meet the terms and conditions and the eligibility requirements for the registration permit. Changes to any source specific conditions in Part Ib of the Type G registration permit cannot be made until the facility has gone through an appropriate revision procedure or been issued new source specific construction permit conditions. If the facility will not meet a term or condition of the registration permit or will become ineligible, the facility must apply for and receive a traditional permit from the DNR before any changes are made that may result in the facility becoming ineligible for the registration permit.
- If the facility's maximum controlled emissions of:
  - PM_{10} are over five tons per year or ...
  - NO_X or SO_2 emissions are over 25 tons per year or…
  - CO emissions are over 50 tons per year or…
  - If the facility's stacks do not meet the registration permit stack requirements…

  ...then before making changes that would increase emissions or making changes to stacks that would decrease the dispersion of air pollution, the facility must show through air quality modeling that emissions will continue to meet air quality standards.

5. What is "Safe Harbor?"

The following Safe Harbor provisions only limit the ability of the DNR to take enforcement actions. Under the currently-approved State Implementation Plan (SIP) the U.S. Environmental Protection Agency (EPA) retains the ability to pursue enforcement in cases where the DNR could not do so.

Safe harbor is a "grace period" of 90 days for facilities to achieve compliance with an applicable regulation in chs. NR 400-499 that a facility did not know it was subject to and subsequently violated or are currently violating. Safe Harbor is available as long as the facility previously made a good faith effort to identify the regulations in chs. NR 400 – 499 that apply to its operations. Safe harbor means there is no penalty for non-compliance discovered at a facility (i.e., the DNR will not take enforcement action), if all the following are met:

- The facility performed and documented a reasonable search and evaluation to identify applicable air pollution regulations and to determine if the facility was meeting those requirements;
- The facility retains documentation demonstrating the search and evaluation that was conducted was reasonable. This documentation must be kept on site and be available for inspection by DNR personnel upon request;
- If the facility subsequently discovers a regulation that applies to it, the facility notifies the DNR of the overlooked regulation within 21 days of identifying it; and
- The facility achieves and certifies compliance with the applicable regulation within 90 days after notifying the DNR.[5] A facility can ask the DNR to extend the grace period if more time is needed to achieve compliance.

Safe harbor recognizes that air pollution regulations are complex and numerous. With safe harbor, a facility has an incentive to rigorously investigate and follow up on its compliance status and work with the DNR to find the best way to meet the obligations and standards in the law.

How does a facility qualify for safe harbor?

- Operate in compliance with the registration permit that the facility is covered under;
- Conduct a *reasonable search and evaluation* initially, and again when emission units are added or modified, when new regulations are published, or when an industry association develops new data:
    - Identify regulations found in chs. NR 400-499, Wis. Adm. Code, which apply to the facility.
    - Determine whether the facility is meeting those regulations.
- Maintain documentation on-site to demonstrate the search and evaluation that was conducted prior to identifying the applicable regulation was reasonable;
- After this search and evaluation, continue to operate in compliance with the regulations that were identified;
- If non-compliance with a previously unidentified applicable regulation is discovered at some point after the search and evaluation:
    - Submit a written notification to the DNR **within 21 days** after identifying non-compliance with an applicable requirement;
    - Certify that the facility is in compliance with the applicable requirement by the appropriate deadline:
        - By default, no later than 90 days after submitting notification; or

[5] The department has the authority to order the facility to achieve compliance in a shorter time period if the shorter time period is feasible and necessary to protect public health and the environment.

- If an extended deadline is requested by the permittee and granted by the DNR, then by the deadline specified by the DNR; or
- If the DNR orders a deadline less than 90 days after submitting the notification, then by that deadline.

How does a facility know and demonstrate that their search and evaluation was "reasonable?"

Section NR 407.105(7), Wisconsin Administrative Code (WAC), indicates that "[a] reasonable search and evaluation" includes a search and evaluation of chs. NR 400 to 499 and shall include a reasonable effort to review other readily accessible information relevant to the facility's operations, such as databases, workshops and materials available through trade associations, vendors, the DNR's SBEAP, U.S. EPA and other recognized sources of information on air regulations.

Keep a written copy of the results of the search and evaluation at the facility for inspection upon request for as long as the facility is covered under the registration permit.

6. Are there fees associated with a registration permit?

Yes. Once covered under a registration permit, all facilities are charged a $400 fee due annually by June 30. There is no fee associated with applying for a registration permit, unless the facility is applying for source-specific conditions along with the Type G registration permits.

7. What are the other options if the facility is not eligible for the registration permit?

The purpose of this guide is to prepare facilities to accurately answer the registration permit application questions, and to advise, before using the application, whether the facility is eligible for the registration permit.

The registration permit eligibility status is NOT a permanent determination. Facilities not eligible at this time, may make operational changes and apply again. For example, if the control equipment does not meet the control requirements in the registration permit, the facility can make improvements and reapply. If the emissions are over the emission threshold, the facility can reformulate a raw material, install control equipment, or make other process changes to reduce emissions and reapply. More information can be found on DNR's Registration Permit Options webpage (*https://dnr.wi.gov/topic/AirPermits/Registration.html)*.

PART II - REGISTRATION PERMIT APPLICATION INSTRUCTIONS

(Each question (1-12) is listed below along with the additional information exactly as it is written in the April 2019 version of the ROP G01 and ROP G02 application, followed by further supporting information provided by this guide. Please note which version of the application is being completed.)

---

1. Green Tier Status

Question 1:

1a. Is the facility an existing Tier 2 participant of the Green Tier Program? ☐Yes ☐No

1b. If "No", does the facility intend to gain acceptance to Tier 2 of the Green Tier Program? ☐Yes ☐No ☐Not Applicable

- If you answer "Yes" to 1a, attach your proof of acceptance into Tier 2 of Green Tier.
- If you answer "Yes" to 1b, then by signing this application you have indicated your intent to join Green Tier as a Tier 2 participant. Go on to Question 2.
- If you answer "No" to 1b, then your facility is ineligible for coverage under the ROPG.

ADDITIONAL INFORMATION: *Facilities that are NOT currently a Tier 2 participant of the Green Tier Program but are planning to gain acceptance as Tier 2 participant may obtain temporary coverage under the Type G01 Registration Construction Permit. This permit allows 18 months for construction or modification and acceptance into Tier 2 of the Green Tier Program. After gaining acceptance into Tier 2, the permittee shall submit to the department proof of acceptance, including a signed participation contract, and the department will proceed to grant coverage under the Type G02 Registration Construction Permit and Type G02 Registration Operation Permit. No additional permit applications are required to obtain coverage under the Type G02 Registration Permit.*

Existing Tier 2 participants that meet the eligibility requirements of the ROPG will receive coverage under the Type G02 Registration Construction Permit and the Type G02 Registration Operation Permit which does not expire as long as the facility maintains good standing under Tier 2 of Green Tier and operates according to the permit requirements.

What does this question mean?

Green Tier is codified in s. 299.83, Wis. Stats., and is a voluntary program that recognizes and rewards environmental performance that voluntarily exceeds legal requirements related to health, safety and the environment resulting in continuous improvement in this state's environment, economy and quality of life. Tier 1 is the entry level into the Green Tier program. It is designed to allow participants committed

to enhanced environmental protection to distinguish themselves from others. Tier 1 participants are generally environmental innovators with proactive management teams. Tier 2 was designed for companies with an effective Environmental Management System (EMS) and a history of superior environmental performance. Tier 2 participants represent the truly exceptional companies that are not only committed to going above and beyond but are also committed to bringing about change in their industry, region, or within their supply chain. More details on becoming a Green Tier participant are available on DNR's Green Tier webpage (*https://dnr.wi.gov/topic/GreenTier/Overview.html)*.

The Type G registration permits are intended for facilities that are current Tier 2 participants or planning to become Tier 2 within 18 months after receiving the initial authorization for construction under the Type G01 registration construction permit. The facility may apply for and the DNR may approve an extension for an additional 18 months. Facilities are responsible for discussing with Green Tier all the benefits, requirements and expectations of the program before applying for the Type G registration permits. Any deliberate misrepresentation of the facility's intentions to achieve or attempt to achieve Tier 2 status within the timeframes established by the permit may result in the withdrawal of the ROP coverage.

Facilities that are accepted into Green Tier may be admitted as Tier 1 which requires a commitment to develop an EMS within one year from the date of acceptance. Once the facility establishes a functioning EMS, or if they already have an EMS in place at the time of application, they can submit a letter of intent to join Tier 2.

Tier 2 participants enter into a participation contract with the DNR. Once the contract is negotiated and signed, Green Tier will send an acceptance letter, commitment outline and a certificate to the facility. The facility's information will also be posted on the Green Tier website. Proof of Tier 2 acceptance includes a signed Tier 2 participation contract or the acceptance letter that is provided by Green Tier.

---

2. Existing Air Permits

Question 2:

2a. Does the facility have any existing air permits (construction or operation)? ☐Yes ☐No

2b. If "Yes", will the facility request any source-specific permit conditions as part of the ROPG permit? ☐Yes ☐No

- If you answer "No" to 2a, go on to Question 3.
- If you answer "No" to 2b, DNR will initiate the revocation of all existing air permits.
- If you answer "Yes" to 2b, submit Form 4530-100 to apply for a source-specific permit or revision of any existing permit(s) needed to maintain the source-specific conditions allowed under the ROPG. DNR will initiate the revocation of all permits except as indicated in your application for source-specific permit conditions.

ADDITIONAL INFORMATION: *The application for the registration permit constitutes a request for revocation of the facility's existing permits. DNR revokes all existing air permits and withdraws all applications prior to granting coverage under the ROPG which then becomes the only active permit unless the applicant has asked to retain certain allowed source specific conditions. Existing permit(s) may be revised to retain allowable source-specific conditions that, per request of the applicant, will be included in Part Ib of the registration permit. Revocation or revision of existing permits requires between 14 to 30 days of public notification. If the facility does not have any air permits, DNR will immediately initiate the process of reviewing and granting coverage under the ROPG.*

Source-specific conditions are limitations, compliance demonstrations, test methods, recordkeeping and reporting requirements established by the department for individual sources that obtained coverage under the ROPG. Source-specific permit conditions shall be originated from a source-specific construction permit and are included in Part Ib of the ROPG. Source-specific permit conditions allowed under the ROPG include: (1) Latest Available Control Techniques (LACT) under s. NR 424.03(2)(b), Wis. Adm. Code; (2) use of source-specific control devices, control efficiencies, and alternate control device monitoring parameters; (3) source-specific control requirements (BACT or LAER) needed to meet applicable limitations of ch. NR 445, Wis. Adm. Code; (4) retention of limitations taken in previously issued permits to avoid major source construction permit review under chs. NR 405 and 408, Wis. Adm. Code; and (5) retention of limitations set in previously issued major source construction permits under s. NR 405.08, Wis. Adm. Code, (BACT) or s. NR 408.04, Wis. Adm. Code, (LAER) and offsets.

Complete Section 3, Question 12 of this application, to provide information on source-specific permit conditions that will be requested along with the ROPG coverage.

What does this question mean?

BACT = Best Available Control Technologies
LAER = Lowest Achievable Emission Rate
LACT = Latest Available Control Techniques and operating practices

What is LACT?

LACT applies to facilities that emit volatile organic compounds and, under s. NR 424.03(2)(c), Wis. Adm. Code, cannot meet the general requirement of 85% control of organic compounds. Chapter NR 424 applies if the facility's processes are not subject to other specific organic compound emission limits found in chs. NR 419, NR 420, or NR 422. LACT is usually a case-by-case determination. However, the DNR has included a generalized LACT in the registration permit that a facility may opt to meet in lieu of a source specific LACT.

What are BACT and LAER?

BACT and LAER refer to control requirements established to reduce emissions for either Major New Source Review construction permits (PSD or Nonattainment) in chs. NR 405 or 408, or for certain hazardous air contaminants in ch. NR 445 (also called state HAPs). These requirements are considered case-by-case determinations because they require the DNR to take into consideration the specific circumstances of each facility and process and set an emission limit or work practice standard that may be unique for that facility.

The Major New Source Review requirements are case-by-case determinations completed during the construction permit application and review process for sources that meet the size criteria included in ch. NR 405 or NR 408, Wis. Adm. Code. An avoidance limit may be included in a construction permit to allow a project to be reviewed as a minor modification under the NR 406 construction permit process. Conditions set under chs. NR 405 and 408 are permanent and may not be revoked. Conditions set to avoid review under chs. NR 405 and 408 are also permanent and if revoked, would trigger the need to go back and complete the Major Source construction permit process.

If a facility emits a hazardous air contaminant that has a control requirement listed in the tables of ch. NR 445, Wis. Adm. Code, and the annual emission rate from all stacks in a stack height category is greater than the thresholds specified in Tables A-C of ch. NR 445, the facility may be subject to BACT or LAER. The DNR will make a case-by-case determination of BACT or LAER to control emissions of these harmful substances. However, a facility may consider the restrictions on the emissions imposed by the registration permit when determining if the emission rates will be over the NR 445 thresholds after coverage. More information and a link to ch. NR 445, Wis. Adm. Code tables are available at the DNR's air toxic and mercury website: (*http://dnr.wi.gov/topic/airquality/toxics.html*), specifically look for the Combined spreadsheet tool tab and the Excel spreadsheet link on the page.

How can a facility determine if it is subject to a case-by-case determination?

If the facility already has air permits for processes at the facility, the permits should be reviewed for the words LACT, BACT or LAER. If there are no permits or it cannot be discerned from the permit whether or not the facility is subject to LACT, BACT or LAER, contact the environmental assistance coordinators at SBEAP for more help in determining whether or not the facility is subject to a case-by-case determination.

What if the facility was previously subject to a BACT or LAER requirement under NR 445, but now has emissions below the threshold?

If actual emissions of a hazardous substance at the facility are below the thresholds in ch. NR 445, the facility can obtain relief from the BACT or LAER requirements with a registration permit. When calculating emissions, the facility should look at the conditions in the registration permit (i.e., if the emissions are controlled, use the control efficiency in the registration permit). The facility may choose to perform risk modeling to demonstrate the predicted risk for the pollutant in question is below the allowable risk contained in NR 445. In addition, the Type G01 and G02 registration permits allow some source-specific conditions, including BACT or LAER, to be included in Part Ib of the permit.

How will the status for obtaining a registration permit be affected if the facility already has a permit with a LACT determination?

If the facility already has a permit with a LACT determination under s. NR 424.03(2)(c), Wis. Adm. Code, the facility may still be eligible for coverage under a registration permit. The facility can request the inclusion of the existing LACT determination in Part Ib of the Type G01 and G02 registration permits (refer to Question 12). Alternatively, the facility shall meet the requirements of s. NR 424.03 by either controlling organic compound emissions by 85%, or by limiting the emissions from the affected process line to 10 tons organic compounds per year and meeting the LACT contained in the registration permit (refer to Section A of the registration permit). The facility may also elect to meet a specific VOC limit in chs. NR 419-423. Unless the facility applies for the source specific LACT to be included in Part Ib, a previous LACT determination will be revoked along with the existing air permits.

What if a facility needs more help determining if it is currently covered by existing construction or operation permit(s)?

- If a facility is unsure whether it is subject to a case-by-case determination, visit the DNR's Air Permit Search website (*http://dnr.wi.gov/topic/AirPermits/Search.html)*. (Note: If the facility has permits issued prior to 1990, they may not be located on this website.)
- Contact the facility's assigned compliance engineer for additional help in the determination. A compliance staff list is available on DNR's Air Quality Contacts webpage (*https://dnr.wi.gov/topic/AirQuality/Contacts.html)*, or if the facility has existing air permits, contact the regional air program as specified in the air permit (most likely found under the "Total Facility" or "Other Conditions Applicable to the Entire Facility" section(s) of the air permit).
- Contact the registration permit coordinator at *DNRamROPSairpermit@wisconsin.gov* for additional help in the facility's determination.

---

3. Program Requirements

Question 3:

Do any of the following conditions affect your facility:

3a. Is the facility an affected source under Acid Rain? ☐Yes ☐No

3b. Is the facility a municipal solid waste combustor or a combustor of infectious waste? ☐Yes ☐No

3c. Is the facility a major source of particulate matter under the Prevention of Significant Deterioration construction permit program in ch. NR 405? ☐Yes ☐No

3d. Is the facility required to meet BACT requirements under ch. NR 405 or LAER requirements under ch. NR 408? ☐Yes ☐No

3e. Has the facility taken limits to avoid BACT requirements under ch. NR 405 or LAER requirements under ch. NR 408? ☐Yes ☐No

- If you answer "Yes" to Question 3a, 3b, or 3c you are NOT eligible for the ROPG.
- If you answer "Yes" to Questions 3d or 3e, you must complete Section 3, Question 12 to apply for a source-specific permit conditions to hold these limitations and go on to Question 4.
- If you answer "No" to all Questions 3a through 3e, go on to Question 4.

ADDITIONAL INFORMATION: *Unless your facility generates electricity by combusting fossil fuels and your capacity to generate electricity is greater than 25 megawatts, you can answer "No" to Question 3a. If you are unsure whether or not your facility is an affected source for the Acid Rain Program, go to http://docs.legis.wisconsin.gov/code/admin_code/nr/400/409.pdf for more information.*

Municipal solid waste combustors and infectious waste combustors are subject to special rules and do NOT qualify for coverage under a registration permit. Municipal solid waste is household waste or solid waste from commercial or industrial sources that does not contain hazardous waste and does not contain any process waste which is the direct or indirect result of the manufacturing of a product or the performance of a service such as dry cleaning or painting. "Municipal solid waste" does not include waste wood, paper mill sludge, sewage sludge, tires or industrial process wastes. Your facility is a municipal solid waste combustor if it is a solid waste treatment facility that is used to burn municipal solid waste or products derived from municipal solid waste, alone or in conjunction with other materials. For more information, go to the DNR Solid Waste website: http://dnr.wi.gov/topic/Waste/Solid.html

Infectious waste is solid waste that contains pathogens with sufficient virulence and in sufficient quantity that exposure of a susceptible human or animal to the solid waste could cause the human or animal to contract an infectious disease. Your facility is a combustor of infectious waste if you burn any such infectious wastes. For more information, go to our website on Managing Healthcare Waste: http://dnr.wi.gov/topic/HealthWaste.

This permit limits PM_{10} emissions to less than 80% of the major source threshold but does not limit total particulate matter. Because total particulate matter is a PSD pollutant your facility may be a major source under PSD if, after coverage under the registration permits, your total particulate matter emissions would still exceed a major source threshold as defined in s. NR 405.02(22), Wis. Adm. Code, (http://docs.legis.wisconsin.gov/code/admin_code/nr/400/405.pdf) and the facility will not be eligible for the registration permit.

What does it mean to be subject to the Acid Rain Program?

Facilities subject to the Acid Rain Program are typically electrical utilities or facilities emitting large amounts of sulfur dioxide. If the facility does not generate electricity or emit large amounts of sulfur dioxide, then answer no to this question.

An "affected source" is a facility that has process(es) that are subject to the standards under ch. NR 409, Wis. Adm. Code, otherwise known as the Acid Rain Program regulations. These regulations apply to certain power generation emission units. The specific units subject to these requirements are listed in s. NR 409.01(1), Wis. Adm. Code (*http://docs.legis.wisconsin.gov/code/admin_code/nr/400/409.pdf)*. Note that U.S. Department of Energy form EIA-860 only applies to electric generating plants with a nameplate rating of 1 megawatt (1000 kW) or more, and therefore, units under 1000 kW are not a 'generator' under s. NR 409.02(42), Wis. Adm. Code. These units would not be considered an affected source for the purpose of the application.

What does it mean to be a solid waste combustor or infectious waste combustor?

Municipal solid waste combustors and infectious waste combustors refer to facilities with incinerators that burn certain types of waste. If the facility does not operate an incinerator, then answer NO to this question. More information is included below**.**

- A municipal solid waste (MSW) combustion source is a facility that has process(es) as defined under s. NR 440.215(2)(k) or s. NR 500.03(151), Wis. Adm. Code.
    - The definition under s. NR 440.215(2)(k), Wis. Adm. Code, is: "'Municipal waste combustor' or 'MWC' or 'MWC unit' means any setting or equipment that combusts solid, liquid or gasified MSW including, but not limited to, field erected incinerators with or without heat recovery; modular incinerators; starved air or excess air; boilers or steam generating units; furnaces whether suspension fired, grate fired, mass fired or fluidized bed fired; and pyrolysis or combustion units. MWC does not include pyrolysis or combustion units located at plastics or rubber recycling plants. MCW does not include internal combustion engines, gas turbines or other combustion devices that combust landfill gases collected by landfill gas collection systems."
    - The definition under s. NR 500.03(151), Wis. Adm. Code, is: "'Municipal solid waste combustor' means any solid waste treatment facility that is used to burn municipal solid waste or products derived from municipal solid waste, alone or in conjunction with other materials."
- Furthermore, the definition of "municipal solid waste" is found under ss. NR 440.215(2)(jm), and NR 500.03(150), Wis. Adm. Code.
    - The definition under s. NR 440.215(2)(jm), Wis. Adm. Code, is: "'Municipal solid waste' or 'municipal type solid waste' or 'MSW' means household, commercial, retail or institutional waste. Household waste includes material discarded by single and multiple residential dwellings, hotels, motels and other similar permanent or temporary housing

establishments or facilities. Commercial or retail waste includes material discarded by stores, offices, restaurants, warehouses, nonmanufacturing activities at industrial facilities and other similar establishments or facilities. …" The definition under s. NR 500.03(150), Wis. Adm. Code, is: "'Municipal solid waste' means: (a) household waste, or (b) solid waste from commercial or industrial sources that does not contain hazardous waste and does not contain any process waste which is the direct or indirect result of the manufacturing of a product or the performance of a service such as dry cleaners or paint shops. 'Municipal solid waste' does not include waste wood, papermill sludge, sewage sludge, tires or industrial process wastes."

- Hazardous waste is defined under s. NR 661, Wis. Adm. Code, (*http://docs.legis.wisconsin.gov/code/admin_code/nr/600/661.pdf)*.
- A hospital/medical/infectious waste combustion source is a facility that has process(es) that combust hospital, medical, and/or infectious waste, as defined under s. NR 500.03(110), Wis. Adm. Code and s. 287.07(7), Wis. Stats, and also under EPA's Federal Rule – 40 CFR Part 62 Subpart HHH (*https://www.govinfo.gov/content/pkg/CFR-2015-title40-vol9/pdf/CFR-2015-title40-vol9-part62-subpartHHH.pdf*).
    - The definition of a Hospital/Medical/Infectious waste incinerator is given by 40 CFR Part 62 Subpart HHH § 62.14490, as: "Hospital/medical/infectious waste incinerator or HMIWI or HMIWI unit means any device that combusts any amount of hospital waste and/or medical/infectious waste."
    - The definition of hospital waste is given by 40 CFR Part 62 Subpart HHH § 62.14490, as: "Hospital waste means discards generated at a hospital, except unused items returned to the manufacturer. The definition of hospital waste does not include human corpses, remains, and anatomical parts that are intended for interment or cremation."
- The definition of medical/infectious waste is given by 40 CFR Part 62 Subpart HHH § 62.14490 (use *https://www.govinfo.gov/content/pkg/CFR-2015-title40-vol9/pdf/CFR-2015-title40-vol9-part62-subpartHHH.pdf* or the full definition), under "Medical/infectious waste."
    - The definition of infectious waste is also given under [s. 287.07(7)(c)1.c., Wis. Stats.], as: "'Infectious waste' means solid waste that contains pathogens with sufficient virulence and in sufficient quantity that exposure of a susceptible human or animal to the solid waste could cause the human or animal to contract an infectious disease."
    - The definition of medical waste is also given under [s. 287.07(7)(c)1.cg., Wis. Stats.], as: "'Medical waste' means containers, packages and materials identified under sub. (4) (of 287.07, Wis. Stats.) that contain infectious waste or that are from a treatment area and are mixed with infectious waste."
    - The definition of a medical waste incinerator is also given under [s. 287.07(7)(c)1.cr., Wis. Stats.], as: "'Medical waste incinerator' means a solid waste treatment facility that primarily burns infectious waste and other waste that contains or may be mixed with infectious waste."
    - Furthermore, the definition of pathological waste is given under 40 CFR Part 60 §60.51c and Part 62 §62.14490, as: "'Pathological waste' means waste material consisting of only human or animal remains, anatomical parts, and/or tissue, the bags/containers used to collect and transport the waste material, and animal bedding (if applicable)."

What does it mean to be a major source for particulate matter under the PSD program?

Facilities with particulate matter greater than the thresholds defined as major source in s. NR 405.02(22), Wis. Adm. Code (*http://docs.legis.wisconsin.gov/code/admin_code/nr/400/405.pdf*) may be subject to major source construction permitting under PSD. While the registration permit limits the potential emissions of PM_{10} to below major source thresholds, it does not provide a similar enforceable limit for total particulate matter emissions.

If PSD may apply to the facility, contact the DNR for further information and analysis of the specific situation surrounding particulate matter at the facility.

How will the status for obtaining a registration permit be affected if the facility is a municipal solid waste combustor, combustor of infectious waste, subject to the Acid Rain program, or major source under the PSD program?

The facility will not be eligible to apply for a registration permit.

What are BACT and LAER?

Refer to Question 2 for details about BACT and LAER.

Is there a place to go for more help to determine the facility's status as this source type?

- Contact the facility's assigned compliance staff for additional help in the determination. A compliance staff list is available on DNR's Air Quality Contacts webpage (*https://dnr.wi.gov/topic/AirQuality/Contacts.html)*, or if the facility has an air permit, contact the regional Air Management Program contact as specified in the air permit (most likely found under the "Total Facility" or "Other Conditions Applicable to the Entire Facility" section(s) of the air permit).
- Contact the registration permit coordinator at *DNRamROPSairpermit@wisconsin.gov* for additional help in the facility's determination.

---

4. New Source Performance Standards (NSPS)

Question 4:

Are any emission units at your facility subject to a New Source Performance Standard (NSPS)? ☐Yes ☐No

- If you answer "No", go on to Question 5.
- If you answer "Yes", list the standard(s) and affected air emission units in the space below:

ADDITIONAL INFORMATION: *New Source Performance Standards (NSPS) are federal regulations that apply to certain type of equipment or industries. All NSPS have an applicability date. Equipment constructed or modified after the applicability date is affected. Facilities subject to NSPS should submit initial notification to EPA and/or DNR. These requirements will not be stated in the ROPG but it is the obligation of the facility to comply with all applicable regulations.*

Process Number	NSPS

What are New Source Performance Standards (NSPS)?

The NSPS are federal air pollution standards that apply to certain types of industrial processes or equipment if the equipment was constructed, modified or reconstructed after a date specified in the rule. For example, there are New Source Performance Standards covering electric arc furnaces at steel plants, but the standards only apply if the furnaces were installed, modified or reconstructed after August 17, 1983. An NSPS typically sets emission standards for criteria pollutants and, less often, for other types of pollutants. For a complete list of NSPS affected source categories and specific descriptions of each category, visit EPA's website *https://www.epa.gov/stationary-sources-air-pollution/new-source-performance-standards*.

What does it mean to have a new, modified or reconstructed source?

See the following definitions:

1. New Sources: a facility, process line or portable source that was constructed after the date specified in the particular standard that applies to the "affected facility."
2. Modification: a physical change or change in the method of operation that produces either more air emissions of the same type or "new" air emissions.
3. Reconstruction: to remove old -- and substitute new -- components that exceed 50 percent of the capital cost of building a new source.

Since February 1, 1984, NSPS have applied to the owner or operator of any stationary source [i.e. facility] that contains an "affected facility." An "affected facility" is the term used by EPA to define any

apparatus, process line or piece of equipment specifically regulated by an applicable NSPS standard in ch. NR 440, Wis. Adm. Code.

How does a facility determine which NSPS apply?

Unlike the Type A, B and C registration permits, the Type G registration permits allow facilities to be affected by any NSPS. The table below contains the list of NSPS that have been incorporated into the Wisconsin Administrative Code. The list of NSPS listed in Table 1 is not inclusive and there are several NSPS that have not been incorporated into the Wis. Adm. Code. The facility is responsible for meeting all NSPS approved by EPA.

Following these general steps may help to determine which NSPS apply to the facility:

- Identify any equipment (processes) at the facility that are new, modified, or reconstructed (see the definitions above).
- Examine the names of NSPS Titles listed in Electronic Code of Federal Regulations and note any that might possibly apply to those processes (*https://www.epa.gov/stationary-sources-air-pollution/new-source-performance-standards*).
- Read the applicability paragraphs and definitions of terms for those NSPS standards that were noted. Pay attention to the date that each section identifies after which changes to the equipment or process must meet the rule. If the changes occurred prior to that date, then the equipment is NOT considered new, modified or reconstructed under the NSPS. Visit the Wisconsin Administrative Code webpage (*http://docs.legis.wisconsin.gov/code/admin_code/nr/400/440.pdf*).
- Decide which standards apply to the facility's processes. Call the DNR for help on this determination if necessary. A compliance staff list is available on DNR's Air Quality Contacts webpage (*https://dnr.wi.gov/topic/AirQuality/Contacts.html),* or if the facility has an air permit, contact the regional Air Management Program as specified in the permit (most likely found under the "Total Facility" or "Other Conditions Applicable to the Entire Facility" section(s) of the air permit). Or, contact the registration permit coordinator at *DNRamROPSairpermit@wisconsin.gov* for additional help.

Titles of NSPS Standards as Incorporated into the Wisconsin Administrative Code	Section
Fossil–fuel–fired steam generators for which construction is commenced after August 17, 1971.	NR 440.19
Electric steam generating units for which construction is commenced after September 18, 1978.	NR 440.20
Industrial – commercial – institutional steam generating units.	NR 440.205
Small industrial–commercial–institutional steam generating units.	NR 440.207
Incinerators.	NR 440.21
Municipal waste combustors for which construction is commenced after December 20, 1989 and on or before September 20, 1994.	NR 440.215
Large municipal waste combustors for which construction is commenced after September 20, 1994 or for which modification or reconstruction is commenced after June 19, 1996.	NR 440.216
Hospital/medical/infectious waste incinerators for which construction is commenced after June 20, 1996.	NR 440.218
Portland cement plants.	NR 440.22
Nitric acid plants.	NR 440.23
Sulfuric acid plants.	NR 440.24
Asphalt concrete plants. (Hot Mix Asphalt Facilities)	NR 440.25
Petroleum refineries.	NR 440.26

Titles of NSPS Standards as Incorporated into the Wisconsin Administrative Code	Section
Storage vessels for petroleum liquids for which construction, reconstruction or modification commenced after June 11, 1973, and prior to May 19, 1978.	NR 440.27
Storage vessels for petroleum liquids for which construction, reconstruction or modification commenced after May 18, 1978, and prior to July 23, 1984.	NR 440.28
Volatile organic liquid storage vessels (including petroleum liquid storage vessels) for which construction, reconstruction or modification commenced after July 23, 1984.	NR 440.285
Secondary lead smelters.	NR 440.29
Secondary brass and bronze production plants.	NR 440.30
Primary emissions from basic oxygen process furnaces for which construction is commenced after June 11, 1973.	NR 440.31
Basic oxygen process steelmaking facilities for which construction is commenced after January 20, 1983.	NR 440.315
Sewage treatment plants.	NR 440.32
Primary copper smelters.	NR 440.33
Primary zinc smelters.	NR 440.34
Primary lead smelters.	NR 440.35
Primary aluminum reduction plants.	NR 440.36
Phosphate fertilizer industry: wet–process phosphoric acid plants.	NR 440.37
Phosphate fertilizer industry: superphosphoric acid plants.	NR 440.38
Phosphate fertilizer industry: diammonium phosphate plants.	NR 440.39
Phosphate fertilizer industry: triple superphosphate plants.	NR 440.40
Phosphate fertilizer industry: granular triple superphosphate storage facilities.	NR 440.41
Coal preparation plants.	NR 440.42
Ferroalloy production facilities.	NR 440.43
Steel plants: electric arc furnaces constructed after October 21, 1974, and on or before August 17, 1983.	NR 440.44
Steel plants: electric arc furnaces and argon–oxygen decarburization vessels constructed after August 17, 1983.	NR 440.445
Kraft pulp mills.	NR 440.45
Glass manufacturing plants.	NR 440.46
Grain elevators.	NR 440.47
Surface coating of metal furniture.	NR 440.48
Stationary gas turbines.	NR 440.50
Lime manufacturing plants.	NR 440.51
Lead–acid battery manufacturing plants.	NR 440.52
Metallic mineral processing plants.	NR 440.525
Automobile and light–duty truck surface coating operations.	NR 440.53
Phosphate rock plants.	NR 440.54
Ammonium sulfate manufacture.	NR 440.55
Graphic arts industry: publication rotogravure printing.	NR 440.56
Pressure sensitive tape and label surface coating operations.	NR 440.565
Industrial surface coating: large appliances.	NR 440.57
Metal coil surface coating.	NR 440.58
Asphalt processing and asphalt roofing manufacture.	NR 440.59
Equipment leaks of VOC in the synthetic organic chemicals manufacturing industry.	NR 440.62
Beverage can surface coating industry.	NR 440.63
Bulk gasoline terminals.	NR 440.64
New residential wood heaters.	NR 440.642
Rubber tire manufacturing industry.	NR 440.644
Volatile organic compound (VOC) emissions from the polymer manufacturing industry.	NR 440.647
Flexible vinyl and urethane coating and printing.	NR 440.65

Titles of NSPS Standards as Incorporated into the Wisconsin Administrative Code	Section
Equipment leaks of VOC in petroleum refineries.	NR 440.66
Synthetic fiber production facilities.	NR 440.67
Volatile organic compound (VOC) emissions from the synthetic organic chemical manufacturing industry (SOCMI) air oxidation unit processes.	NR 440.675
Petroleum dry cleaners.	NR 440.68
Equipment leaks of VOC from onshore natural gas processing plants.	NR 440.682
Onshore natural gas processing: SO2 emissions.	NR 440.684
Volatile organic compound (VOC) emissions from synthetic organic chemical manufacturing industry (SOCMI) distillation operations.	NR 440.686
Nonmetallic mineral processing plants.	NR 440.688
Wool fiberglass insulation manufacturing plants.	NR 440.69
VOC emissions from petroleum refinery wastewater systems.	NR 440.70
Volatile organic compound emissions from synthetic organic chemical manufacturing industry (SOCMI) reactor processes.	NR 440.705
Magnetic tape coating facilities.	NR 440.71
Industrial surface coating: surface coating of plastic parts for business machines.	NR 440.72
Calciners and dryers in mineral industries.	NR 440.73
Polymeric coating of supporting substrates facilities.	NR 440.74
Municipal solid waste landfills.	NR 440.75
Small municipal waste combustion units for which construction is commenced after August 30, 1999 or for which modification or reconstruction is commenced after June 6, 2001.	NR 440.76
Commercial and Industrial Solid Waste Incineration Units for Which Construction is Commenced After November 30, 1999 or for Which Modification or Reconstruction is Commenced on or After June 1, 2001.	NR 440.77

What is the best way to answer the question about whether the facility is subject to an NSPS?

- After determining which NSPS apply to the facility, if the facility meets the NSPS eligibility criteria for at least one category then answer **"YES"** to this question on the application.
- Contact the registration permit coordinator at *DNRamROPSairpermit@wisconsin.gov* for additional help in the facility's determination.

---

5. National Emissions Standards for Hazardous Air Pollutants (NESHAP)

Question 5:

Are any emission units at your facility subject to a National Emissions Standard for Hazardous Air Pollutants (NESHAP)? ☐Yes ☐No

- If you answer "No", go on to Question 6.
- If you answer "Yes", list the standard(s) and affected air emission units in the space below:

ADDITIONAL INFORMATION: *National Emissions Standards for Hazardous Air Pollutants (NESHAPs) are federal regulations that apply to certain type of equipment or industries. Facilities subject to a NESHAP that requires the source to obtain a Part 70 permit are NOT eligible for registration permits. Facilities subject to certain NESHAPs should submit an initial notification. These requirements will not be stated in the ROPG but it is the obligation of the facility to comply with all applicable regulations.*

Process Number	NESHAP

What does this question mean?

A NESHAP is a federal regulation, sometimes incorporated into state rules, to control emissions of 187 federally regulated hazardous air pollutants (*https://www.epa.gov/stationary-sources-air-pollution/national-emission-standards-hazardous-air-pollutants-neshap-9)*.

It is often referred to as a MACT standard (Maximum Achievable Control Technology) but NESHAPs can require either MACT level control or less stringent GACT (Generally Available Control Technology) level controls for smaller sources. Most NESHAPs that apply to small sources of hazardous air pollution, referred to as ***area sources***, are regulated to a level referred to as GACT.

Most GACT standards only have recordkeeping requirements such as a requirement to keep a record of the amount of a substance used, or the blueprints of a piece of equipment. These federal regulations also have notification requirements, which is the requirement to submit or otherwise notify EPA or the DNR of the status with the requirement under the NESHAP such as the requirement to submit a written statement of the date a piece of equipment was installed.

How can a facility determine if it is subject to a NESHAP?
View the U.S. EPA's website for a complete list of NESHAP affected source categories and specific descriptions of each category (*https://www.epa.gov/stationary-sources-air-pollution/national-emission-standards-hazardous-air-pollutants-neshap-9)*.

If the facility has an existing permit, conditions labeled as 40 CFR 63 or ch. NR 440 can indicate the facility is subject to a NESHAP. In limited circumstances, if the operations that were subject to the NESHAP are changed or removed from the facility or the facility no longer engages in the activities covered by the NESHAP, then it may be possible to determine that the standard no longer applies.

How can a facility find more help determining if it is subject to a NESHAP?

- The SBEAP employs environmental assistance coordinators who can assist small businesses with understanding their environmental requirements. The SBEAP's website contains additional information on the program as well as contact information.
- Contact the registration permit coordinator at *DNRamROPSairpermit@wisconsin.gov* for additional help.

---

6. Control Efficiencies

Question 6:

Answer the following questions for all air pollution control devices needed to meet a registration permit emission cap. If the control devices are not needed to meet the registration permit emission cap (e.g. your emissions are below the permit threshold without counting the control efficiency of the device(s)), answer **Not Applicable** to 6a and go on to Question 7.

6a. Are all of the air pollution control devices at the facility listed in the table below? ☐Yes ☐No ☐Not Applicable

6b. If you answer "Yes" to 6a, are you using the minimum control efficiency required by the registration permit for the calculation of facility-wide emissions? ☐Yes ☐No ☐Not Applicable

6c. If you answer "No" to 6a or 6b, do you operate a control device not listed in the table or a control device with a higher minimum control efficiency to meet an applicable standard as described in the exceptions below? ☐Yes ☐No ☐Not Applicable

- If you answer "Yes" to 6a and 6b, indicate which control device(s) you have from the table below. Then go on to Question 7.
- If you answer "No" to either 6a or 6b and "Yes" to 6c, then describe the applicable requirement as an exception in the Comments section below. Compliance with the applicable requirement will be the responsibility of the applicant.
- If you answer "No" to either 6a or 6b and "No" to 6c, then you may apply for source-specific permit conditions to include the alternate control device and/or efficiency. See Section 3, Question 12, of the source-specific permit conditions of this application.

Control Device	Minimum Control Efficiency (Total Enclosure Capture)			Minimum Control Efficiency (Hood Capture)			Your Control Device Efficiencies	
	PM	PM10 and PHAP	VOC and VHAP	PM	PM10 and PHAP	VOC and VHAP	Hood	Total Enclosure
Low efficiency cyclone	40 %	20 %		32 %	16 %			
Medium efficiency cyclone	60 %	40 %		48 %	32 %			
High efficiency cyclone	80 %	64 %		60 %	48 %			
Multiple cyclone w/out fly ash reinjection	80 %	60 %		64 %	48 %			
Multiple cyclone with fly ash reinjection	50 %	38 %		40 %	30 %			
Wet cyclone separator	50 %	40 %		38 %	30 %			
HEPA and other wall filters (including paint overspray filters)	95 %	95 %		76 %	76 %			

Control Device	Minimum Control Efficiency (Total Enclosure Capture)			Minimum Control Efficiency (Hood Capture)			Your Control Device Efficiencies	
	PM	PM10 and PHAP	VOC and VHAP	PM	PM10 and PHAP	VOC and VHAP	Hood	Total Enclosure
Fabric filters (e.g., baghouse, cartridge collectors)	98 %	92 %		78 %	73 %			
Spray towers	80 %	80 %	70 %	64 %	64 %	56 %		
Venturi scrubber	90 %	85 %		72 %	68 %			
Condensation scrubber (packed bed)	90 %	90 %		72 %	72 %			
Impingement plate scrubber	75 %	75 %		60 %	60 %			
Electrostatic precipitators	95 %	95 %		76 %	76 %			
Thermal oxidizers			95 %			76 %		
Catalytic oxidizers			95 %			76 %		
Condenser			70 %			56 %		
Flaring or direct combustor			98 %			78 %		
Biofiltration			80 %			64 %		
Adsorber (activated Carbon Systems carbon adsorption, solvent recovery)			85 %			68 %		

ADDITIONAL INFORMATION: *The emission cap for the ROPG is less than 80% of the major source thresholds, which equates to less than 80 tons/year each for NOx, SO_2, CO, VOC and PM_{10}, 0.5 tons/year for lead, 8 tons/year for a single HAP and 20 tons/year of all HAPs combined (note: lower thresholds may apply for VOC and NOx in ozone nonattainment areas. Use the interactive map at https://dnr.wi.gov/topic/AirPermits/Nonattainment.html to determine thresholds for VOC and NOx for your area.) The ROPG requires control devices to meet a minimum percentage for overall control efficiencies unless the control efficiency is included in Part Ib of the registration permit. Indicate your control efficiency in the total enclosure column if 100% of emissions are directed to the control device or enter the efficiency percentage in the hood column if emissions are only partially captured under a hood before being directed to the control device. If you use more than one of the same type of control device, please describe this in the comments section below. If you want to take credit for using control devices with overall control efficiencies different from those listed in the table above, complete Section 3, Question 12, of this application.*

Exceptions to meeting the minimum control efficiency would be if the facility obtains source-specific control efficiencies or if the facility operates a control device that is required by an applicable standard or regulation (i.e., graphic arts operations that must meet 90% reduction efficiency in s. NR 422.14(2)(c)3). You may use the control efficiency listed in source-specific permit conditions listed in Part Ib of the registration permit for your facility or the control efficiency required by rule in calculating your annual emissions to compare against the permit cap, even in the case that a device is not listed or if it is less than the minimum listed efficiency.

Please list the applicable requirement or standard and the applicable limits or control efficiencies in the comments section below. Include all documentation necessary to demonstrate or justify alternate efficiencies.

What does this question mean?

The registration permit contains the control devices and the minimum control efficiency levels that control devices at a facility must meet or exceed, unless the facility chooses to have source-specific control efficiency in Part Ib of the ROPG (Question 12 has more information). If the facility chooses to only operate according to the general permit conditions, Part Ia of the ROPG, the control devices and their required minimum control efficiencies listed in Part Ia of the ROPG (see the table in Question 6 text) shall be used for the calculation of emissions in Question 7. If a facility has a control device not listed in Part Ia of the ROPG and/or needs to have a source-specific control efficiency included in Part Ib of the ROPG, then the source-specific control efficiency can be used in the calculation of emissions in Question 7.

In order to qualify and remain eligible for the registration permit, the facility must first identify all control devices at the facility. Next, identify which devices are required by an applicable regulation, are needed to meet an applicable emission limitation or are needed to keep facility-wide emissions below the emissions limits in the ROPG. Finally, the facility must determine the actual control efficiency for each control device and compare this efficiency to the appropriate minimum control efficiency level that is listed in the table above in Question 6. A description of how to determine control efficiency is included below. If the facility is required to operate an air pollution control device but the control efficiency is less than the value listed the table in Question 6, the facility should request to have the lower control efficiency included in Part Ib of the ROPG to become eligible for coverage. Conversely, if the facility operates a control device but depends on a higher control efficiency than afforded in Part Ia to keep the facility below the emission limits in the ROPG, the facility should request to have the higher control efficiency included in Part Ib of the ROPG to become eligible for coverage.

What does control efficiency mean?

Control efficiency is a measure of air pollution reduction. It is a percentage value representing the amount of air pollution emission reduction caused by a control device. Occasionally devices may be used to collect process materials that can be reused as part of the process.

When evaluating whether this type of equipment is inherent to the process, the DNR considers the questions outlined in a November 27, 1995 letter from David Solomon, Integrated Implementation Group, U.S. EPA, to Mr. Timothy Mohin, Government Affairs, Intel Corporation. The letter addresses situations for which case-by-case judgments may be needed regarding whether control equipment should be considered as air pollution control equipment, or whether that equipment is an inherent part of the process. Provide detailed information to answer the following questions:

- Is the primary purpose of the equipment to control air pollution?
- Where the equipment is recovering product, how do the cost savings from the product recovery compare to the cost of the equipment?
- Would the equipment be installed if no air quality regulations are in place?

Provide specific details to elaborate the answers and include a quantitative cost savings analysis. The DNR will review the responses to these questions and make a case-by-case determination whether the equipment is inherent to the process.

If the DNR approves a control device as inherent process equipment, the maximum theoretical emissions from the process take into account the removal efficiency of the inherent process equipment. If the facility uses a collection efficiency for the inherent process equipment that is greater than the control efficiency for that type of equipment allowed in the table below when calculating emissions, the application should include documentation supporting the collection efficiency used to determine emissions or documentation supporting the emission rate after the collection equipment. Examples of supporting documentation include equipment manufacturer control also known as emission guarantees, or stack test results that comply with the requirements in NR 439. For more details on stack test requirements, refer to SB119 or contact the ROP coordinator.

Note:

- Equipment typically considered to be air pollution control equipment that is determined to be inherent process equipment is subject to the same monitoring and recordkeeping requirements identified for that type of equipment in Section E of the ROP or s. NR 439.055, Wis. Adm. Code.
- If a collection efficiency for inherent process equipment is greater than the control efficiency for the type of equipment identified in Section G of the ROP, that section is used to determine emissions. Stack testing may be required as a condition of the approval for coverage under the ROP to demonstrate that the inherent process equipment provides the claimed collection efficiency or meets the claimed emission rate.

How is control efficiency calculated?

A control device's efficiency is defined using the following equation:

$$\text{CE} = \frac{[(E_{\text{in}}) - (E_{\text{out}})]}{(E_{\text{in}})} \times 100\%$$

where:

CE = Control device efficiency (%)

E_{in} = Pollutant emission rate entering the control device (lb/hr or similar units)

E_{out} = Pollutant emission rate exiting the control device (lb/hr or similar units)

For example, if a pollution control device's efficiency is stated as 90% removal or destruction efficiency, it means that for every 10 pounds of an air pollutant entering the device, only one pound of the pollutant is emitted to the atmosphere.

How is control efficiency determined?

A facility can determine the control efficiency by several means. The preferred, and most accurate, method is through actual performance testing of the control device at the facility, where the amount of pollution entering the control device is measured and the amount of pollution being emitted is measured. If performance testing at the facility has never been done, an alternative method of estimating the control efficiency is manufacturer's testing results or guarantees. This information should have been supplied in the documentation that came with the control device, if not, contact the

manufacturer of the control device. Documentation is required to meet the compliance demonstration requirements of the registration permits.

If multiple control devices are used for the same process, how is overall control efficiency determined?

If more than one control device controls a pollutant from a process, there are different ways, depending on the configuration of the control devices, to determine the overall control efficiency.

- If the control devices are in parallel (as shown in Figure 6.1, below), simply compare the individual control efficiencies of each device with the required control efficiency in the registration permit.
- If the control devices are in series (as shown in Figure 6.2, below), use the following equation to determine the overall efficiency, and compare this efficiency with the required control efficiency in the Registration Permit:

$$\text{Overall Control Efficiency} = \left[\left(1 - \left(((100 - CE1)/100)x((100 - CE2)/100)x((100 - CE3)/100)...\right)\right]\times 100\%$$

where:

CE1 = Control efficiency of first control device

CE2 = Control efficiency of second control device (if applicable)

CE3 = Control efficiency of third control device (if applicable)

... = Add more control devices into the equation if applicable

Figure 6.1 - Control Devices in Parallel

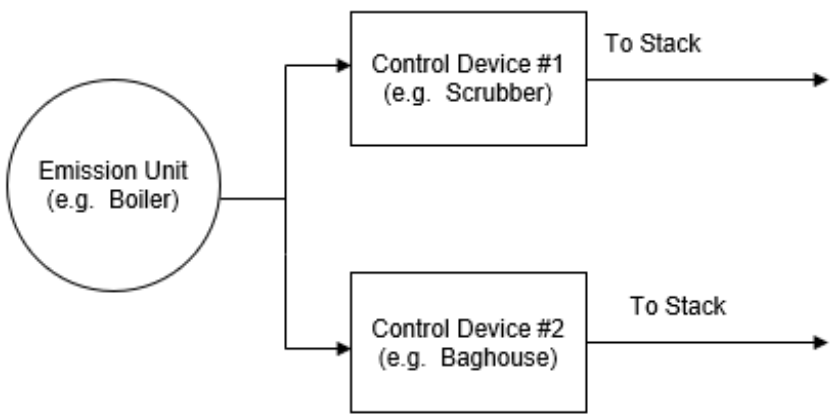

Figure 6.2 - Control Devices in Series

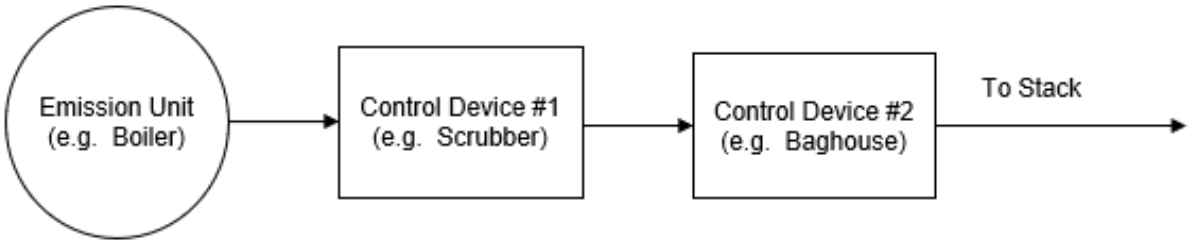

What if help is still needed in determining how to answer this question?

- Contact the registration permit coordinator at *DNRamROPSairpermit@wisconsin.gov* for additional help in the facility's determination.

---

7. Emission Limits

Question 7:

List your expected facility-wide annual calendar year emissions and maximum controlled annual emission rate for each of the following pollutants. Once you have entered the emissions, go on to Question 8. Calculations must be attached to your application.

Pollutant	Annual Emissions (ton/yr)	Maximum Controlled Emissions (ton/yr)
PM_{10} (Particulate Matter less than 10 microns)		
$PM_{2.5}$ (Particulate Matter less than 2.5 microns)		
Sulfur Dioxide (SO_2)		
Nitrogen Oxides (NO_x)		
Carbon Monoxide (CO)		
Volatile Organic Compounds (VOC)		
Lead		

ADDITIONAL INFORMATION: *In order to qualify for the ROPG coverage, your calendar year emissions may not exceed 80% of the major source thresholds, which, in most areas of the state, equates to less than 80 tons/year each for NO_x, SO_2, CO, VOC and PM_{10}, 0.5 tons/year for lead, 8 tons/year for a single HAP and 20 tons/year of all HAPs combined. See https://dnr.wi.gov/topic/AirPermits/Nonattainment.html to determine if your facility is located in a nonattainment area and what major source thresholds apply.*

If you use a control device to meet an emission cap, you must meet the control efficiencies listed in Section G of the Type G01 and G02 Registration Permit at http://dnr.wi.gov/topic/AirPermits/Options.html (or in the table in question 6. above), or the control efficiency required in an applicable standard. Alternatively, if plans to request a source-specific control efficiency to be incorporated in Part Ib of the registration permit, annual calendar year emissions are calculated using annual throughputs and the alternate control efficiency requested for the source specific condition. Be sure to send copies of all calculations with the application, including sources of emissions factors.

Maximum controlled emissions are calculated using the maximum hourly capacity of the equipment and assuming operation 8,760 hours per year. Realistic operating scenarios may be considered in lieu of using 8,760. Include a clear explanation of calculation methods with your application.

Emissions from insignificant emission units do not need to be included in the application though additional information may be requested.

What does this question mean?

A registration permit effectively limits a facility's potential to emit air pollution. Once the facility is covered under the registration permit, the facility must limit each 12-consecutive month total actual emissions to below the limits so the facility can remain eligible for coverage under the registration permit. The table below shows the pollutants covered by the registration permit emission limits and the highest emissions allowed under each pollutant's limit, according to current major source threshold levels[6] in Wisconsin.

Emissions from the insignificant emission units listed under Appendix A are not required to be included in the facility-wide emissions.

Pollutant	Emission Limits
Particulate Matter less than 10 microns (PM_{10}) and Particulate Matter less than 5 microns ($PM_{2.5}$)	< 80 ton/year for PM_{10} and $PM_{2.5}$ attainment & moderate nonattainment areas < 56 ton/year for serious PM_{10} and $PM_{2.5}$ nonattainment areas
Volatile Organic Compounds (VOCs)	< 80 ton/year for attainment and basic, rural transport, marginal or moderate ozone nonattainment areas < 40 ton/year for serious ozone nonattainment or areas within ozone transport regions except for any severe or extreme nonattainment area for ozone < 20 ton/year for severe ozone nonattainment areas < 8 tons/year for extreme ozone nonattainment areas
Nitrogen Oxides (NOx)	< 80 ton/year for attainment and basic, marginal or moderate ozone nonattainment areas < 40 ton/year for serious ozone nonattainment or areas within ozone transport regions except for any severe or extreme nonattainment area for ozone < 20 ton/year for severe ozone nonattainment areas < 8 tons/year for extreme ozone nonattainment areas
Sulfur Dioxide (SO_2)	< 80 ton/year
Carbon Monoxide (CO)	< 80 ton/year for attainment and moderate carbon monoxide nonattainment areas < 40 tons/year for serious nonattainment areas, where the DNR determines a stationary source contributes significantly to CO levels in the area
Lead	< 0.5 tons/year
Section 112(b) Hazardous Air Pollutants (Federal HAP)[7]	< 8.0 ton/year for any *single* Federal Hazardous Air Pollutant < 20.0 ton/year for a *combination* of all Federal Hazardous Air Pollutants

[6] Major source thresholds are set based on the attainment status of an area of a state with respect to the NAAQS. Depending on whether an area of the state meets the NAAQS, it will be designated as attainment (meets the standards) or non-attainment (does not meet the standards) for a specific pollutant. Most areas in Wisconsin are considered attainment areas.
[7] A list of these air pollutants is available at *http://www.epa.gov/haps/initial-list-hazardous-air-pollutants-modifications*.

What are these pollutants, and where might they be generated at a facility?

- **Particulate matter, or PM,** is the term for particles found in the air, including dust, dirt, soot, smoke, and liquid droplets. **PM_{10}** is the portion of particulate matter emitted which has a diameter less than or equal to 10 micrometers. Some common sources of PM_{10} include crushing or grinding operations, sanding, road dust, handling of materials and spray painting. **$PM_{2.5}$** has a diameter less than or equal to 2.5 micrometers. Direct emissions of $PM_{2.5}$ are predominantly from combustion and other high temperature operations. $PM_{2.5}$ is known to cause more health problems than larger sized particulate matter.
- **Volatile organic compounds, or VOC**, are organic compounds which, in the presence of nitrogen oxides and sunlight, form ground level ozone. Volatile organic compounds are emitted from many processes, often from those that use paints, inks, lacquers, adhesives, other coatings, and cleanup or other types of solvents.
- **Nitrogen oxides, or NOx,** are the generic terms for a group of highly reactive gases, all of which contain nitrogen and oxygen in varying amounts. Many of the nitrogen oxides are colorless and odorless. Nitrogen oxides form when fuel is burned at high temperatures, as in a combustion process (e.g., boilers, space heaters, diesel generators).
- **Sulfur dioxide, or SO_2,** belongs to the family of sulfur oxide gases (SOx). Sulfur is prevalent in most raw materials, including crude oil, coal and ore that contains common metals like aluminum, copper, zinc, lead and iron. SOx gases are formed when fuel containing sulfur, such as coal, diesel and fuel oil, is burned, and when gasoline is extracted from oil or metals are extracted from ore.
- **Carbon monoxide, or CO**, is a colorless, odorless gas that is formed when carbon in fuel is not burned completely. In combustion processes, the carbon in the fuel is never completely combusted, and a portion becomes CO. Other sources of CO emissions include industrial processes (such as metals processing and chemical manufacturing).
- **Lead** is a metal found naturally in the environment as well as in manufactured products. The major sources of lead emissions have historically been motor vehicles (such as cars and trucks) and industrial sources. Due to the phase out of leaded gasoline, metals processing is the major source of lead emissions today. The highest levels of lead emissions are generally found near lead smelters. Other stationary sources include utilities and lead-acid battery manufacturers.
- **Section 112(b) Hazardous Air Pollutants, or Federal HAPs**, are pollutants that EPA has designated as being known or suspected to cause cancer or other serious health effects, such as reproductive effects or birth defects, or adverse environmental effects. Section 112(b) hazardous air pollutants means the federally regulated air pollutants included in the list in section 112(b)(1) of the Clean Air Act as revised by 40 CFR part 63 Subpart C. Examples of HAPs include benzene, found in gasoline; perchloroethylene, emitted from some dry-cleaning facilities; and methylene chloride, used as a solvent and paint stripper by a number of industries.

When do emissions need to be calculated?

The DNR recommends that before a facility applies for a registration permit, they review the annual emissions for the most recent 12-consecutive month period and calculate an estimate of the 12-consecutive month rolling total emissions for the next 12 months, where each total is adjusted as necessary using the control efficiencies prescribed by the registration permit. Compare these emissions with the emission limits in the table above. Based on the calculations, if the facility will not be able to stay under the registration permit emission limits, this type of permit is not the right permit for the facility.

When does a facility need to begin meeting the emission limits in the registration permit?
Facilities must meet the emission limits as soon as coverage under the registration permit begins. For example, if the facility was granted coverage under the registration permit in December 2022, the emissions for December and the preceding 11 months in 2022 must be below the emission limits, even though the facility was only covered by the registration permit for one month of the year.

Can a facility consider control devices when calculating 12-consecutive month emissions?

Yes, as long as the control device is listed in either Part Ia or Part Ib of the registration permit (see Question 6). If an emission unit at the facility is covered by an applicable requirement that specifically requires a type of control device not listed, the facility may also use that control device to calculate emissions but only for the emission unit covered by the applicable requirement.

What are the control efficiencies that a facility must use to calculate emissions?

Any control devices that a facility must use to meet the emission limit of the registration permit must meet the minimum control efficiency listed in Question 6, unless the control efficiency is listed in the source-specific section (Part Ib) of the ROPG. One exception is if an applicable requirement specifically requires a different control efficiency. Then, the facility may use that control efficiency in the emission calculations but only for the emission unit subject to the rule-based control efficiency. Another exception is if there are stack test results for thermal or catalytic oxidizers that were completed within the five years prior to the time of application for the registration permit, the facility can use the destruction efficiency for the calculation of the VOC and HAP emissions. A copy of the results will need to be on file in the DNR records to be used for the registration permit emissions calculations.

What happens to the emission limits if the attainment area status of the county where the facility operates changes?

If the attainment status for any pollutant for the area in which the facility is located changes, the emission limit for that pollutant may change. For example, the major source threshold for a moderate nonattainment area for ozone is 100 tons per year of VOC. The threshold for a severe non-attainment area for ozone is 25 tons per year of VOC. If the area in which a facility is located is re-designated from moderate ozone nonattainment to severe ozone nonattainment, the VOC emission limit for the facility would drop from 80 tons per year to 20 tons per year. Note that the DNR has time to inform affected sources of impending changes in attainment status for the location of any affected facilities and would assist facilities through such a change.

How does a facility calculate annual emissions?

If a facility submits an annual Air Emissions Inventory Report to the DNR, this report can be used to help estimate whether or not the emissions have been and will be below the registration permit emission limits. Be aware the control device efficiencies used in the Air Emissions Inventory Report might be higher than what is allowed under the registration permit. For example, there is a large difference between the 92% control allowed for PM_{10} from baghouses in Part Ia of the registration permit and the 99.9% control efficiency given to many baghouses in the air emissions inventory calculations. If the facility has control devices, recalculate the emissions in the inventory, substituting the registration permit control efficiencies for the actual control efficiencies used in the inventory.

If the facility has never submitted an Air Emissions Inventory Report to the DNR, or if the facility has control devices and wants to more accurately estimate emissions for registration permit purposes, follow the steps below.

- Calculate emissions for each pollutant from each emission unit[8] at the facility, except those units listed in Appendix A.
- Similar emission units may be grouped together for emission calculation purposes if they are uncontrolled or use the same type of control device.
- If emissions are controlled by a control device, the facility must use the control efficiency from either Part Ia or Ib of the ROPG that corresponds to that type of control device used to control emissions of that pollutant. Annual emissions of all uncontrolled pollutants can be used. Or, if the facility's actual emissions are not known, use the emission limit of an applicable requirement as an estimate of the emissions.
- Actual hours operated during each month, actual production rates for each month of the year or other production or operational data can be used for these calculations. Make sure the facility does not anticipate exceeding the 12-consecutive month totals in the future, however. For example, if the facility currently operates one shift per day but would like to increase to two shifts, double the actual production numbers to ensure the facility will qualify for this permit.
- Choose one of the calculation methods in **a.** through **d.**, below, for each emission unit (or group of emission units) at the facility. If emission factors or other emissions data was developed specifically for the facility operations using the facility's own stack testing information or material analysis, use these emission factors or other data rather than emission factors or other data published by U.S. EPA, safety data sheet (SDS), or trade associations.
- Fugitive dust emissions[9] must be included in the emission calculations only if the facility is in a category listed in ss. NR 407.02(4)(b)1., to 27., Wis. Adm. Code. These categories are shown in Appendix B of this document.
- If an emission unit exhausts inside a building, PM_{10} and other pollutants emitted as particles from that unit, do not need to be included in the emission calculations. It can be assumed these emissions settle inside the building.
- Once the emissions from each emissions unit and each group of similar emissions units at the facility have been calculated, add up the emissions of each pollutant from all emissions units at the facility and make sure the estimated future 12-consecutive month total emissions of each pollutant will not exceed its limit.
- Once the facility is covered under the registration permit, that facility will be required to report the actual annual emissions to the Wisconsin Air Emissions Inventory (AEI) and submit an annual certification of compliance with these emission limits. In addition, each 12-consecutive month rolling total emissions calculation will need to be on file at the facility to demonstrate compliance.

What are the calculation methods?

a. Emission calculation based on the source's actual operating parameters, as shown in the following equation:

$$E = \sum_{n=1}^{12} \{OP \times U_{EF} \times [1-CE]\}$$

where:

[8] An emissions unit is "any part [process equipment, etc.] of a facility which emits or is capable of emitting any air pollutant."
[9] "Fugitive dust emissions" means, for the purposes of calculating emissions for the ROP emission limit, particulate matter emissions that do not exit from a flue or stack. Outdoor storage piles or dust from roadways on the facility's property are common sources of fugitive dust.

E = Emissions in tons per year, as the sum of emissions from each calendar month over each set of 12-consecutive months

OP = Operating Parameter as required by the emission factor (e.g., actual hours of operation or number of units produced, or gallons of fuel used)

U_{EF} = Emission Factor (e.g., pounds of pollutant per hour of operation or number of units produced, or gallons of fuel used)

NOTE: *An "emission factor" is a representative value that relates the amount of a pollutant released to the atmosphere with an activity associated with the release of that pollutant. These factors are usually expressed as the weight of pollutant divided by a unit weight, volume, distance, or duration of the activity emitting the pollutant (e.g., pounds of PM_{10} emitted per ton of coal burned). The best emission factors to use are ones developed at the facility using approved test methods and the facility's own material throughput. If emission testing has not been done at the facility, the facility can find emission factors for many types of emission sources using the U.S. EPA document AP-42 available at the following website: https://www.epa.gov/air-emissions-factors-and-quantification/ap-42-compilation-air-emission-factors#5thed. Trade associations and equipment manufacturers also publish emission factors suitable for estimating emissions.*

CE = Control Device Efficiency (percent expressed as a decimal fraction) as listed in the Registration Permit. No other control device efficiency may be used for CE unless higher control efficiency is specifically required by an applicable requirement that the emission unit is subject to. If no control device is installed for an emission unit or if the control device is not designed to control a given pollutant, then CE = 0.

b. Another way to calculate the 12-consecutive month total emissions is to use the applicable emission limitation for the emission unit and multiply by the hours it is expected to operate in any 12-consecutive month period. This method may over-estimate the emissions but will not require the development of emission factors or use control efficiencies that are much lower than the actual control efficiency.

For example, using the published uncontrolled emission factor for asphalt concrete plants and the allowed control efficiency for baghouses would result in emissions of PM_{10} from asphalt concrete plants of over 100 lb/hr. Most asphalt plants will choose to use emission factors developed from actual emission testing at their facilities. However, the applicable emission limitation method could also be used.

Assuming the applicable emission limitation is 0.039 gr/dscf. This emission limitation can be converted into a pound per hour number using the facility specific information on air flow and moisture content. For the plant, this emission rate might be around 7.6 lb/hr. If the plant always operates less than 3000 hours per year, a good estimate of the emissions from the plant would be:

7.6 lb/hr x 3000 hr/yr x 1 ton/2000 lb = 11.4 tons per year

c. A material balance may be used to calculate VOC emissions:

$$E = \sum_{n=1}^{12} [(ax - y - cz) \times (1 - d)]/2000 \text{ lb/ton}$$

where:

E = the emissions of VOC in tons per year, as the sum of emissions from each calendar month over each set of 12-consecutive months.

a = the amount of material entering the process in a month. This is typically gallons of paint or pounds of adhesive.

x = the amount of VOC contained in the material. This is sometimes given as a percent by weight or may be given in lb/gallon. Be sure documentation of the VOC content in each material is available, using a signed statement from the supplier, results from an approved test method or the SDS.

y = the amount of VOC incorporated permanently into the product. This includes VOCs chemically transformed in production. It does not include latent VOC remaining in the product that will at some time be released to the atmosphere.

c = the amount of material, if any, leaving the process as waste in a month. This might be unused paint left in the bottom of the paint pot or spent cleaning solvent to be shipped off as hazardous waste.

z = the amount of VOC contained in the material, if any, leaving the process as waste, or otherwise not incorporated into the product and not emitted to the air.

d = the control device efficiency (percent expressed as a decimal fraction of 1.0), as listed in the Registration Permit (see discussion above for Question 6). If there is no control device, d=0.

d. Sulfur dioxide emissions may be determined by measuring the sulfur content of the fuel used and assuming that all of the sulfur in the fuel is oxidized to sulfur dioxide. The sulfur content of each batch of fuel received must be measured by an independent laboratory using ASTM methods or verified by vendor certification. The sulfur dioxide emissions must be determined for each batch of fuel received by using the following equation:

$$\mathbf{SO_2 = \%S/100 \times F/2{,}000 \times 2}$$

where,

SO_2 = Tons of sulfur dioxide emissions from a given batch of fuel

%S = Weight percent sulfur in the fuel being burned

F = Amount of fuel in a given batch, in pounds

2,000 = Pounds per ton

2 = 2/1 = 64/32 = Pounds of sulfur dioxide per pound of sulfur in one pound-mole

The total sulfur dioxide emissions for the year equals the sum of the sulfur dioxide emissions from all individual fuel batches burned during the calendar year.

What if the facility needs more help calculating emissions?

- The SBEAP employs environmental assistance coordinators who can assist small businesses in calculating their emissions. SBEAP's website contains additional information on the program as well as contact information.
- The SBEAP developed an Air Pollution Emission Calculation Spreadsheet (https://widnr.widen.net/s/pb2smbxmxg/sb301).
- Unsure what emission factor to use for an emission unit at a facility? The U.S. EPA maintains a document titled AP-42, Compilation of Air Pollution Emission Factors which contains representative emission factors for a variety of industrial categories and processes.

- Or contact the registration permit coordinator at *DNRamROPSairpermit@wisconsin.gov* for additional help in the facility's determination.

Example Calculation

Shown below is an example emission calculation for a combustion process. PM and PM_{10} calculations are included as it is important to confirm that PM emissions do not trigger PSD requirements.

Note that no control device is present, so CE = d = 0:

– **Combustion source**

Emissions Unit:	90 million BTU per hour boiler (90 MMBTU/hr)
Fuel:	Natural gas
Heat content:	1,000 MMBTU/million cubic feet of natural gas (1,000 MMBTU/cf6)
Back up Fuel:	#2 Fuel oil
Heat content:	140 MMBTU/1,000 gallons of #2 fuel oil (140 MMBTU/Mgal)

Particulate matter (PM) is calculated as follows:

Natural gas:

The emission factor is from AP-42, Chapter 1, Section 1.4, for boilers. Total particulate matter is the sum of the filterable and condensable particulate matter.

PM: (5.7 + 1.9) lb/cf6 X 90 MMBTU/hr X cf6/1,000 MMBTU = 0.684 lb/hr

PM: 0.684 lb/hr X 8,760 hr/yr X ton/2,000 lb = 3.00 ton per year (TPY)

#2 Fuel oil:

The emission factor is from AP-42, Chapter 1, Section 1.3, for Industrial boilers of <100 MMBTU/hr, distillate oil fired. No emission factor is included for condensable particulate matter; the listed emission factor will be assumed to be a reasonable estimate for total particulate matter emissions.

PM: 2 lb/1,000 gal X 90 MMBTU/hr X 1,000 gal/140 MMBTU = 1.29 lb/hr

PM: 1.29 lb/hr X 8,760 hr/yr X ton/2,000 lb = 5.63 TPY

PM_{10} is calculated as follows:

<u>Natural gas:</u>

The emission factor is from U.S. EPAs spreadsheet of adjusted emission factors: *natgas_procgas_lpg_pm_efs_not_ap42_032012_revisions.xls*. Total PM_{10} emissions equal the sum of filterable and condensable.

PM_{10}: (0.52 + 0.2) lb/cf6 X 90 MMBTU/hr X cf6/1,000 MMBTU = 0.0486 lb/hr

PM_{10}: 0.0486 lb/hr X 8,760 hr/yr X ton/2,000 lb = 0.21 ton per year (TPY)

<u>#2 Fuel oil:</u>

The emission factor is from AP-42, Chapter 1, Section 1.3, for Industrial boilers of <100 MMBTU/hr, distillate oil fired. Total particulate matter emissions equal the sum of filterable and condensable, and multiplied by the fraction for PM_{10} (50%).

PM_{10}: (2 + 1.3) lb/1,000 gal X 0.5 PM_{10}/PM X 90 MMBTU/hr X 1,000 gal/140 MMBTU = 1.06 lb/hr

PM_{10}: 1.06 lb/hr X 8,760 hr/yr X ton/2,000 lb = 4.65 TPY

During a given calendar year, a facility might use both fuels in the same unit at different times, so the total actual PM_{10} emissions for the year would be determined by taking into account the amount of each fuel actually burned in the unit during the year.

Why does the facility also calculate maximum controlled emissions?

In order to protect NAAQS, the registration permit contains the annual limit on emissions and special stack requirements. For facilities that meet the stack configuration required by the registration permits (see Question 8) and with *maximum controlled emissions* below the thresholds of 5 ton/yr PM_{10}, 25 ton/yr of SO_2 and NO_X, and 50 ton/yr of CO the DNR has determined that emissions will not violate a NAAQS. However, if the facility has maximum controlled emissions of equal to or greater than those thresholds, an air quality dispersion model will need to be run as part of the review of the Registration Permit Application. Any application requesting source specific conditions may require air quality dispersion modeling. The DNR performs required modeling analyses for minor source permit applications. See Air Dispersion Modeling Guidelines (https://dnr.wi.gov/files/PDF/pubs/am/AM528.pdf) for more information on when a modeling analysis must be performed for source specific permits.

How can a facility calculate the maximum controlled emissions?

First, a facility needs to determine which emission units to include in their calculation. The emission units listed in Appendix A do not need to be included. Also, facilities do not need to include emissions from general building ventilation. If a facility has PM_{10} coming off a process line that is vented to the inside of the building, the facility does not need to determine how much is emitted from general building ventilation. Note: Roof vents placed specifically to vent air emissions from processes are not considered general building ventilation and are considered stacks.

Second, facilities need to calculate the maximum **hourly** emissions of criteria pollutants from all the other emission units at the facility. This is determined by using the maximum rated capacity and either emission factors published by U.S. EPA, the equipment manufacturer, trade associations or from stack testing data.

Third, if the facility used a control device on the emission unit to control emissions of PM_{10}, the facility may use the control efficiency to reduce the maximum **hourly** emissions. These are the maximum controlled hourly emissions. Only control devices listed in either Part Ia or that will be listed in Part Ib of the ROPG, or listed in an applicable requirement that the emission unit is subject to, may be used in this calculation.

Finally, the facility needs to calculate the **annual** maximum controlled emissions. Multiply the maximum controlled hourly emissions by 8,760 hours per year to obtain the annual emission rate. If it is not physically possible to operate 8,760 hours per year, the facility is allowed to take into consideration realistic operating scenarios. For example, if the facility cannot operate when the ground is frozen, the facility may take that into consideration. If the facility operation is a batch process that requires a certain amount of down time to change out batches or equipment, the facility may also consider this when determining the maximum hours of operation. A written copy of how the **annual** maximum controlled emissions were calculated and a justification of the hours per year used, if less than 8,760 hours, must be retained by the facility.

What must a facility do if the emissions are over either of the annual maximum controlled emissions thresholds?

If the annual maximum controlled emissions from the facility are greater than or equal to five tons per year of PM_{10}, greater than or equal to 25 tons per year of SO_2 or NO_X, or greater than or equal to 50 tons per year of CO then air quality modeling must be performed by the facility. The facility must Complete Part 1 of the Modeling Assessment Form 4530-156A available by link in the Registration Permit Application and on the Air Permit and Compliance Forms webpage. Complete and submit Form 4530-156A with the signed registration permit application. Any application requesting source specific conditions may require air quality dispersion modeling. The DNR performs required modeling analyses for minor source permit applications. See Air Dispersion Modeling Guidelines (https://dnr.wi.gov/files/PDF/pubs/am/AM528.pdf) for more information on when a modeling analysis must be performed for source specific permits.

Finally, if the stacks do not meet the registration permit stack requirements, the facility will be required to provide air quality modeling results for all pollutants at the facility. Refer to Question 8 for more information on air quality modeling and which emissions sources and pollutants will need to be modeled to provide modeling results using Part 1 of the Modeling Assessment Form 4530-156A.

What if a facility needs help calculating maximum controlled emissions?

If a facility needs assistance answering this question, contact the registration permit coordinator at *DNRamROPSairpermit@wisconsin.gov* for additional help.

---

8. Stacks

Question 8:

Answer the following three questions about stacks at your facility. Exclude stacks that vent insignificant emissions units or insignificant pollutants. Then, go on to Question 9.

8a. Are any stacks shorter than nearby buildings? ☐Yes ☐No

8b. Do any stacks discharge horizontally or in a downward direction? ☐Yes ☐No

8c. Do any stacks have rain hats or other devices that obstruct air flow? ☐Yes ☐No

- If you answer "Yes" to any of these questions and the maximum controlled emissions exceed 5 tons of PM_{10}, SO_2, or NO_x per year, you will need to attach the results of an air quality analysis to your application demonstrating that your facility emissions do not cause or exacerbate a violation of the ambient air quality standards. If your facility had an air quality analysis done for a previous permit review and you have not made changes to emission rates or stacks since the analysis was performed, you may attach those results. If you do not have old air quality analysis or if you have made changes to your stacks or emissions since the analysis, you will need to have a new analysis performed. Use Part 1 of the Modeling Assessment Form available at DNR's Registration Permit Options website: *http://dnr.wi.gov/topic/AirPermits/Registration.html* or directly at *http://dnr.wi.gov/files/PDF/forms/4500/4530-156A.pdf*.

- If you answer "No" to all of these questions but the maximum controlled emissions exceed 5 tons of PM_{10}, 25 tons of SO_2, or NO_x, or 50 tons of CO per year, you will also need to attach to your application the results of an air quality analysis for the pollutants exceeding a modeling threshold.

- If you answer "No" to all of these questions and the maximum controlled emissions are less than 5 tons of PM_{10} per year, 25 tons of SO_2 or NO_x per year, and 50 tons of CO per year, an air quality analysis is not required for the review.

ADDITIONAL INFORMATION: *Stack vented emissions must be exhausted from unobstructed discharge points that are within 10 degrees of vertical. Stacks that are closed when the process is not operating, but that are open when the process is operating are considered to be unobstructed. Stacks must be taller than any building that influences the dispersion of emissions from the stack. A building is considered to influence the dispersion of emissions if the stack is located within a circle around the building, the radius of which is 5 times the height of the building.*

What does this question mean?

A facility will meet the registration permit stack requirements if all stacks at the facility other than stacks that are general building ventilation or stacks venting the emission units listed in Appendix A can meet the following:

- The stacks at the facility must be taller than all buildings on which they are located and all buildings that could significantly influence the stacks' emissions as they spread out from their exhaust points into the surrounding area (see example below for how this is determined). A building is considered to influence a stack's emissions if the stack is located within five building heights of that building.
- All stacks at the facility must discharge upwards (within 10 degrees of vertical).
- All stacks at the facility must discharge to the atmosphere without alteration of flow due to an obstruction (e.g., rain hat) while the process they serve is operating.

See the following diagram for illustration.

Figure 8.1 Stack heights Relative to Nearby Buildings (Side Perspective-- not to scale)

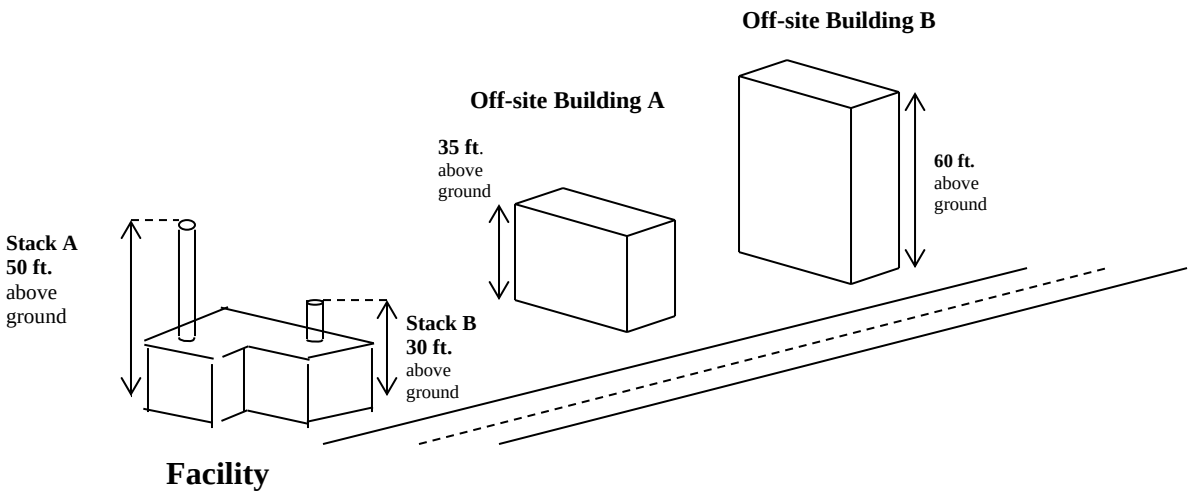

Figure 8.2 Stack heights Relative to Nearby Buildings (Top View-- not to scale)

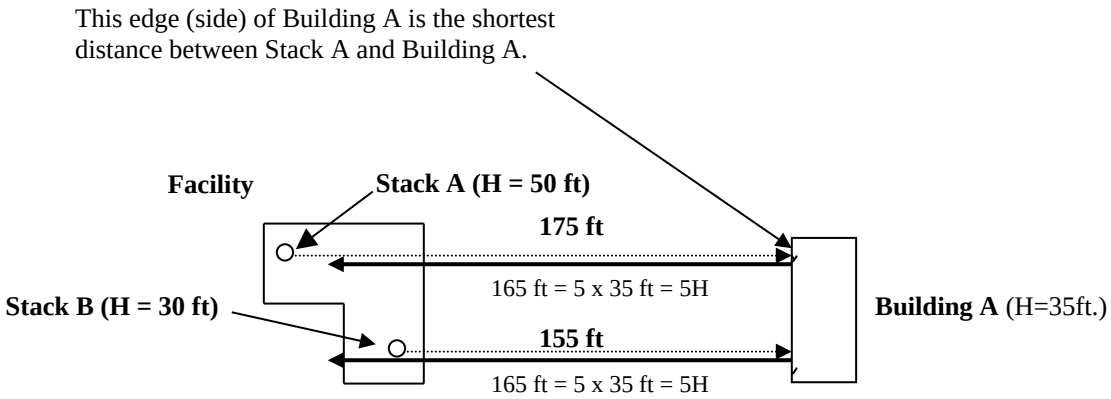

In the example depicted in Figures 8.1 and 8.2, all facility stacks and nearby buildings should be individually evaluated in all combinations by determining the nearest point on a given building's perimeter (e.g. Building A) to the stack being evaluated (e.g. Stack A) and then checking whether the distance between that point and the stack is less than five times the building's (e.g. Building A) height (**the "5H-range"**). In this example, only the 30-foot stack at the facility is within the 5H-range of Building A. Since Building A has a height of 35 feet, the height of Stack B would have to be raised to higher than 35 feet, in order to answer YES to Question 8.

To further illustrate other possible cases, here are several variations of this example:

- Consider the possibility that Building B (H = 60 ft) was located close enough to the facility that the 50-foot stack was within the 5H-range for Building B (300 ft). In that case, both stacks would have to be raised above 60 feet in order to answer YES to Question 8.
- Consider the case where Building A had a height of 25 feet. In that case, the 30-foot Stack B would be greater than that building's height and, if all other facility stacks meet the 5H-range test for all nearby buildings, then answer YES to Question 8.
- Consider the case where Building A was located on the facility's property and was owned by the facility. Ownership of buildings and whether the locations of buildings are on or off the facility's property are not taken into consideration. In other words, all buildings, whether owned by the facility or not and whether located on the facility's property or not, must be evaluated if they are possibly within the 5H-range for one or more facility stacks.
- There may be buildings all around a facility which require evaluation, rather than just a few along a single street, and in that case their 5H-ranges would also require comparison to the facility's stack locations.
- If there are no buildings in the usual sense, but there are large structures on or off the facility, their heights and proximity to facility stacks must be evaluated if they can be expected to influence the dispersion of emissions from a stack.
- Finally, consider the case where the facility has a stack attached to the side of its own building, but that stack is not taller than that building. In this case, the stack height must be raised above the building height, in order to answer YES to Question 8, assuming that no other nearby buildings would require the stack to be raised even higher.

Again, some stacks do not need to be considered when determining if the facility meets the stack requirements. These include stacks whose only purpose is for general building ventilation and stacks that serve emission units listed in Appendix A of this guide**.**

What if any one of the facility's stacks does not meet the stack requirements?

If any of the stacks at the facility do not meet the requirements listed above, the facility may still be able to qualify for coverage under the registration permit. Use air quality modeling performed previously as part of issuance of an operation permit or perform a computer modeling analysis to determine whether the predicted impact from the facility meets NAAQS.

Can an existing operation permit be used to determine if the stacks meet the registration permit stack requirements?

If the facility was modeled by the DNR for issuance of a facility wide operation permit, the modeling results can be used to show that the facility meets NAAQS. As part of the evaluation of whether existing permits can be revoked, the DNR will perform a review of the NAAQS. If the facility's emission rates, as allowed under the registration permit at current stack configurations are not protective of the NAAQS, the existing facility-wide permit will not be revoked and the facility will not be eligible for coverage under this permit. This could happen if the registration permit Part Ia control efficiencies are lower than those contained in the facility's existing operation permit, and the facility does not request that the permitted control efficiencies be carried over into Part Ib of the ROPG permit. If facility-wide modeling data is available for the entire facility, the DNR will indicate that current stack configurations and allowable emissions rates are protective of the NAAQS. Complete Part 1 of the Modeling Assessment (Form 4530-156A) and submit it with the signed copy of the registration permit application.

Should a facility do its own dispersion modeling to determine if the stacks meet the NAAQS?

A facility must perform a more refined modeling analysis using the current U.S. EPA-accepted refined dispersion model. The refined model is a complex model that typically requires the help of a trained consultant. The Wisconsin DNR's modeling website has more information (*http://dnr.wi.gov/topic/airpermits/modeling.html)*. Whether a facility runs the model themselves or hires a consultant to run the dispersion model, the facility will need to make sure to use the correct emission rates in the modeling analysis.

Which pollutants does a facility need to include in the modeling analysis?

First a facility needs to figure out which emission units and pollutants to include in the modeling analysis. The emission units listed in Appendix A do not need to be included. Facilities do not need to include emissions from general building ventilation. The modeling required in this section is only for PM_{10}, sulfur dioxide, nitrogen oxide, carbon monoxide and lead.

If the maximum controlled facility-wide emissions of PM_{10}, sulfur dioxide, nitrogen oxide, carbon monoxide or lead is less than five tons per year, the facility does not need to provide modeling results for that pollutant. If the maximum controlled emissions of all pollutants from any single emission unit are all less than one ton per year, that emission unit does not need to be included in the model. Only one of these aforementioned exemptions can be used for the modeling analysis.

To calculate the maximum controlled annual emissions, first calculate the maximum controlled hourly emissions as described below. Then multiply the maximum controlled hourly emissions by 8,760 hours per year to obtain the annual emission rate. If it is not physically possible to operate 8,760 hours per year, facilities are allowed to take into consideration realistic operating scenarios. For example, if the facility cannot operate when the ground is frozen, it may omit months where the ground is frozen from

the calculations. If the operation is a batch process that requires a certain amount of down time to change out batches or equipment, the facility may use fewer operating hours per year. A written copy of how the annual maximum controlled emissions were calculated and a justification of the hours per year used, if less than 8,760 hours, must be retained by the facility.

How does a facility calculate the emission rates to use in the model?

The maximum controlled hourly emission rates must be used in the model. To calculate the maximum controlled hourly emissions of air pollutants, use the maximum rated capacity of each unit and either emission factors published by U.S. EPA, the equipment manufacturer, trade associations or emission factors developed from stack testing data at the facility. Refer to Question 7 for more information on ways to calculate the facility's maximum hourly emissions.

If the facility uses a control device on the emission unit to control emissions of PM_{10}, use the control efficiency to reduce the maximum hourly emissions. These are the maximum controlled hourly emissions. Only control devices listed in either the Part Ia or those that will be listed in Part Ib of the ROPG or listed in an applicable requirement that the emission unit is subject to may be used in this calculation.

How does a facility show that its modeling analysis is adequate to demonstrate protection of the NAAQS?

Facilities will need to print and fill out Part 1 of the Modeling Assessment Form 4530-156A and provide it with the signed copy of the registration permit application. Facilities will also need to retain either an electronic or paper copy of the modeling analysis input and output on site and available for inspection for the duration of the facility's coverage under the registration permit.

What if a facility needs more assistance in answering this question?

Contact the registration permit coordinator at *DNRamROPSairpermit@wisconsin.gov* for additional help in determining if the facility's stacks meet the stack requirements of the registration permit or for direction on determining how to get an air quality modeling assessment done for the facility.

---

9. Hazardous Air Pollutants

Question 9:

Does your facility emit any regulated hazardous air pollutants (HAPs)? ☐Yes ☐No

- If you answer "No", go on to Question 10.
- If you answer "Yes", list the pollutant and its expected facility-wide actual emissions and maximum controlled emissions in the table or comment section below:

Hazardous Air Pollutant (HAP)	CAS Number	Federal HAP[10]	Non-exempt State HAP	Stack Height (ft)	Vertical and Unobstructed Stack(s)	Actual Emissions		Maximum Controlled Emissions	
						(lb/hr)	(lb/yr)	(lb/hr)	(lb/yr)
		☐Yes ☐No	☐Yes ☐No		☐Yes ☐No				
		☐Yes ☐No	☐Yes ☐No		☐Yes ☐No				
		☐Yes ☐No	☐Yes ☐No		☐Yes ☐No				
		☐Yes ☐No	☐Yes ☐No		☐Yes ☐No				
		☐Yes ☐No	☐Yes ☐No		☐Yes ☐No				
		☐Yes ☐No	☐Yes ☐No		☐Yes ☐No				
		☐Yes ☐No	☐Yes ☐No		☐Yes ☐No				
		☐Yes ☐No	☐Yes ☐No		☐Yes ☐No				
		☐Yes ☐No	☐Yes ☐No		☐Yes ☐No				
		☐Yes ☐No	☐Yes ☐No		☐Yes ☐No				
		☐Yes ☐No	☐Yes ☐No		☐Yes ☐No				
		☐Yes ☐No	☐Yes ☐No		☐Yes ☐No				
Total of Federal HAPs =									

ADDITIONAL INFORMATION: *The registration permit caps emissions of each federally regulated Hazardous Air Pollutant (HAP) to 16,000 pounds per year and caps the total of all federally regulated HAPs combined to 40,000 pounds per year. If you use a control device to meet an emission cap, you must use the control efficiencies listed in Section G of the Type G01 and G02 Registration Permit at http://dnr.wi.gov/topic/AirPermits/Registration.html, the control efficiency required in an applicable standard, or the source-specific control efficiencies listed in Part Ib of the registration permit. Be sure to send copies of all calculations with the application.*

Maximum controlled emissions are calculated using the maximum hourly capacity of the equipment and assuming operation 8,760 hours per year. Realistic operating scenarios may be considered in lieu of using 8,760. Include a clear explanation of calculation methods with your application.

State HAPs are listed in chapter NR 445, Wis. Adm. Code, http://docs.legis.wisconsin.gov/code/admin_code/nr/400/445. The list of federal HAPs can be found at https://www.epa.gov/haps/initial-list-hazardous-air-pollutants-modifications. For additional information

---

[10] A list of these air pollutants is available at https://www.epa.gov/haps/initial-list-hazardous-air-pollutants-modifications.

on calculating your facility-wide annual emissions, visit DNR's Small Business Environmental Assistance Program website at http://dnr.wi.gov/topic/SmallBusiness/.

What does this question mean?

More information on HAPs is available at the DNR's air toxic and mercury webpage (*http://dnr.wi.gov/topic/airquality/toxics.html)*. The Federal standards tab contains a link to the federally regulated HAPs listed in s. 112(b) of the Clean Air Act as revised by 40 CFR part 63 Subpart C. The list of state HAPs can be found in Tables A, B and C of chapter NR 445, Wis. Adm. Code. More information about the state hazardous air contaminant rule can be found in the Wisconsin Air Toxics Rule (NR 445) Fact Sheet.

For state HAPs, exclude any that are generated by combustion of group 1 virgin fossil fuels (e.g., natural gas, liquid petroleum gas, distillate fuel oil, gasoline and diesel fuel) or other exempt emissions listed in NR 445.

Include the stack information (e.g., height, vertical and unobstructed) for those that are non-exempt state HAPs. An "unobstructed stack" means one that does not block the vertical flow of pollutants while the process is in operation. A diagram of unobstructed stack configurations is shown in the fact sheet "Modeling Emissions for Air Pollution Permits", *SB-116*.

Refer to Question 7 for information on how to calculate emissions.

---

10. Source-specific HAP Limits

Question 10:

Is the facility required to meet Best Available Control Technology (BACT) or Lowest Achievable Emission Rate (LAER) for the control of Hazardous Air Pollutant (HAP) emissions under ch. NR 445, Wis. Adm. Code? ☐Yes ☐No

- If your facility does not emit any HAP regulated under chapter NR 445, Wis. Adm. Code or HAP emissions are below thresholds for emissions points in Table A of section NR 445.07, Wis. Adm. Code, answer "No" and then go on to Question 11.
- If you answer "Yes", you must complete Section 3, Question 12 to apply for a source-specific permit conditions to hold 445 BACT or LAER requirements.

ADDITIONAL INFORMATION: *The owner or operator of a source that emits a non-exempt state hazardous air contaminant for which a control requirement is identified in column (i) of Table A of section NR 445.07, Wis. Adm. Code (http://docs.legis.wisconsin.gov/code/admin_code/nr/400/445) in a quantity that requires the facility to apply BACT or LAER may not operate under this Registration Permit unless it applies for and obtains an approved case by case BACT or LAER determination to include in Part Ib.*

"Best available control technology" or "BACT" means an emission limit for a hazardous air contaminant based on the maximum degree of reduction practically achievable as specified by the department on an individual case−by−case basis considering energy, economic and environmental impacts and other costs related to the source. "Lowest achievable emission rate" or "LAER" means the rate of emission of a hazardous air contaminant that reflects the more stringent of the following: (a) The most stringent emission limitation for the hazardous air contaminant which is contained in the air pollution regulatory program of any state for this class or category of source, unless an applicant for a permit demonstrates that this limitation is not achievable; (b) The most stringent emission limitation for the hazardous air contaminant which is achieved in practice by the class or category of source.

What does this question mean?

Refer to Questions 2 and 9 for details on BACT/LAER limits for compliance with NR 445. Facilities subject to BACT or LAER in ch. NR 445 shall obtain source-specific conditions in order to be eligible for coverage under the ROPG (Refer to Question 12 for additional information).

---

11. Source-specific Organic Compound Limits

Question 11:

Does the facility have records that show all process lines emit less than 15 pounds of organic compounds in any day? ☐Yes ☐No ☐Not Applicable

- If you answer, "Yes," go on to Question 12.
- If your facility does not operate any process lines or does not emit organic compounds from process lines, answer "Not Applicable" and go on to Question 12.
- If you answer "No" go to Question 11a.

11a. Does the facility control emissions of organic compounds from any process line using any of the following compliance demonstration methods? ☐Yes ☐No

- Meet the requirements of an applicable or elected RACT rule in chs. NR 419 to 423
- Apply 85% control
- Meet the standard LACT conditions in A.5 of Part Ia of the ROPG.

- If you answer "Yes" to 11a, indicate the limit that you plan to meet for each process line in the following table:
- If you answer "No" to 11a, you must complete Section 3, Question 12 to apply for a source-specific permit conditions to establish a source-specific LACT as required in s. NR 424.03(2)(c), Wis. Adm. Code.

Election of Compliance Demonstration for Control of Organic Compounds for each Process Line				
Process Line ID	**Description**	**Organic Compound Limit (Check the column for the limit you plan to meet)**		
		RACT (Indicate the Rule)	**85% control**	**ROPG Standard LACT**
		☐	☐	☐
		☐	☐	☐
		☐	☐	☐
		☐	☐	☐
		☐	☐	☐

ADDITIONAL INFORMATION: *"Process line" means one or more actions or unit operations which must function simultaneously or in sequence in order to manufacture or modify a product. For example, a spray booth, conveyor and drying oven are considered a process line. Facilities shall meet one of the control requirements for organic compounds emissions in the following order of priority:*

(1) ***Applicable RACT -*** *Meet a RACT in chapters NR 419, 420, 421, 422, 423 or 424, Wis. Adm. Code (facilities subject to a RACT shall demonstrate compliance with those requirements and do not have the option for using other compliance demonstrations);*

(2) ***85% Control -*** *Apply 85% control of organic compounds for each process line;*

(3) ***ROPG Standard LACT -*** *Adopt the ROPG standard latest available control technique and operating practices demonstrating best current technology (LACT) for each process line (i.e. cap organic compound emissions from each process line to 10 tons per year);* ***or***

(4) ***Elected RACT -*** *If a surface or printing process line meets the specific applicability requirements in any section from ss. NR 422.05 to 422.155, Wis. Adm. Code, but is not subject to that section based on an exemption, the facility may elect to meet the emission limitations in ss. NR 422.05 to 422.155. Geographic location or emission rates are not considered in determining if a process line meets the specific applicability requirements. The intention is to allow facilities that are in the same industrial group as those for which the section was written to use the conditions in that section.*

(5) ***Source-Specific LACT -*** *Apply source-specific latest available control techniques and operating practices demonstrating best current technology (LACT) for each process line. The facility must have or obtain a source-specific construction permit to establish source-specific LACT. Once approved, this LACT will be included in Part Ib of the registration permit. See Section 3, Question 12.*

By approving coverage for a facility under a registration permit, the department has approved the organic compound limit elected by the facility for each process line.

What does this question mean?

LACT applies to facilities that emit volatile organic compounds and, under s. NR 424.03(2)(c), Wis. Adm. Code, cannot meet the general requirement of 85 percent control of organic compounds. Chapter NR 424 applies if the facility's processes are not subject to other specific organic compound emission limits found in chs. NR 419, NR 420, NR 421, NR 422, and NR 423. LACT is usually a case-by-case determination. The DNR has included a generalized LACT into the registration permit so that more facilities can qualify for coverage. If the facility is subject to LACT but cannot comply with the LACT included, a source-specific option may be proposed. A construction permit revision will be issued to include an approved source-specific LACT into Part Ib of the registration permit.

RACT rules established control requirements for certain industries with emissions of volatile organic compounds in an effort to reduce ozone emissions in counties that did not meet national ambient air quality standards. Most RACT rules have applicability thresholds ranging from 3 tons per year to 100 tons per year. Facilities may have elected to restrict their emissions below an applicability threshold in a construction and/or operation permit to avoid having to meet the RACT requirements. After revoking an existing permit with a RACT avoidance limit, the facility will be required to meet the RACT limit that applies. In this case, a facility is still eligible for coverage under the registration permit. More information about VOC RACT rules is available on DNR's VOC RACT Rules for Specific Industries fact sheet (https://widnr.widen.net/view/pdf/yd5q646v9n/AM414.pdf?t.download=true).

Section 3: Source-Specific Conditions

NOTE: Complete this section if your facility needs or opts to have source-specific permit conditions along with the coverage under the ROPG. The source-specific permit that holds the source-specific permit conditions included in Part Ib of the ROPG must be approved through a separate review process, which includes preparation of an analysis, preliminary determination, and draft permit which undergoes the appropriate public notice and comment period before issuance. Future changes to emissions units covered by any source specific conditions could be subject to source specific construction permitting requirements, and any new emissions units that needed source specific conditions would need to obtain a construction permit before commencing the change or new construction.

---

12. Proposed Source-specific Conditions for Part Ib

Question 12:

Is the facility required to obtain or electing source-specific conditions? ☐Yes ☐No

- If you answer "No", then complete the signature block on the bottom of this page and proceed to submit your application. Remember to attach a clear description of the facility, modeling results if required, and detailed calculations.
- If you answer "Yes", use the comment section below to list the types of source-specific conditions you are requesting. You will need to prepare and attach a separate application for a source-specific permit or an application for the revision of existing source-specific permits.

ADDITIONAL INFORMATION: *Most facilities eligible for the ROPG can operate according to the General Conditions included in Part Ia and do not need to have additional source-specific permit conditions. This will streamline the registration permit coverage approval process. If the facility cannot operate following Part Ia alone, or if a source-specific emission limit must be included to make the facility eligible for coverage under the registration permit, then the facility shall apply for source-specific conditions to be approved in a source-specific permit and included in Part Ib of the ROPG. Facilities requesting to have source-specific conditions shall complete and submit Form 4530-100 to apply for either a new permit or for revision of an existing permit. (https://dnr.wi.gov/topic/AirPermits/Forms.html) An application fee may be required. Source-specific permit conditions allowed under ROPG include:*

(1) Latest Available Control Techniques (LACT) under s. NR 424.03(2)(c), Wis. Adm. Code;
(2) use of source-specific control devices, control efficiencies, and alternate control device monitoring parameters;
(3) source-specific control requirements (BACT or LAER) needed to meet applicable limitations of ch. NR 445, Wis. Adm. Code;
(4) retention of limitations taken in previously issued permits to avoid major source construction permit review under chs. NR 405 and 408, Wis. Adm. Code; and
(5) retention of limitations set in previously issued major source construction permits under s. NR 405.08, Wis. Adm. Code, (BACT) or s. NR 408.04, Wis. Adm. Code, (LAER) and s. NR 408.06, Wis. Adm. Code, offsets.

What does this question mean?

Once a facility has determined that source-specific conditions are needed or required to be eligible for the registration permits, the facility should apply for a new construction permit or the revision of an existing construction permit using Form 4530-100 (https://dnr.wisconsin.gov/topic/AirPermits/Forms.html) and pay the review fees if applicable. The DNR will initiate a review of the source-specific construction permit. Typically, the review and issuance of a source-specific construction permit takes between three and ten months. If the facility is able and willing to meet the general requirements of the ROPG, coverage may be granted while the DNR reviews and drafts the source specific permit conditions. However, if the facility does not qualify for coverage without source specific conditions, coverage will not be granted until the new source-specific permit has been issued. This source-specific construction permit will be incorporated by reference as Part Ib of the ROPG.

Any further changes to the facility's operations that affect any of the processes or conditions included in Part Ib of the ROPG will require the revision of the source-specific construction permit that originated these conditions prior implementing these changes or may require a new construction permit

Refer to Question 2 for details on source-specific conditions that are allowed to be included in Part Ib of the registration permits.

What if a facility needs more assistance in answering this question?

If a facility still needs assistance answering this question, contact the registration permit coordinator at *DNRamROPSairpermit@wisconsin.gov* for additional help.

Wisconsin Department of Natural Resources
Air Management Program
Box 7921- AM/7
Madison, WI 53707
PHONE 608-266-7718 • FAX 608-267-0560

APPENDIX A – Emission Units Not Subject to Certain Registration Permit Requirements

1. Convenience space heating units with combined heat input capacity of less than 5 million Btu per hour that burn gaseous fuels, liquid fuels or wood.
2. Convenience water heating.
3. Maintenance of grounds, equipment and buildings, including lawn care, pest control, grinding, cutting, welding, painting, woodworking, general repairs and cleaning, but not including use of organic compounds such as clean−up solvents.
4. Boiler, turbine, generator, heating and air conditioning maintenance.
5. Pollution control equipment maintenance.
6. Internal combustion engines used for warehousing and material transport, forklifts and courier vehicles, front end loaders, graders and trucks, carts and maintenance trucks.
7. Fire control equipment.
8. Janitorial activities.
9. Office activities.
10. Fuel oil storage tanks with a combined capacity of 10,000 gallons or less.
11. Stockpiled contaminated soils.
12. Demineralization and oxygen scavenging of water for boilers.
13. Purging of natural gas lines.
14. Any emission unit, operation, or activity that has, for each air contaminant, maximum controlled emissions that are less than the level specified in Table 3 of ch. NR 407, Wis. Adm. Code. Multiple emissions units, operations, or activities that perform identical or similar functions shall be combined for the purposes of this determination.
15. If the maximum controlled emissions of any air contaminants listed in Table 3 of ch. NR 407, Wis. Adm. Code, from all emission units, operations or activities at a facility are less than five times the level specified in Table 3 of ch. NR 407, Wis. Adm. Code, for those air contaminants, any emission unit operation or activity that emits only those air contaminants.

NOTE: Additional information is located in Table 3 of ch. NR 407, Wis. Adm. Code (*http://docs.legis.wisconsin.gov/code/admin_code/nr/400/407.pdf*).

APPENDIX B - Categories of Sources Required to Include Fugitive Particulate Matter Emissions in Their Emission Calculations

1. Coal cleaning plants with thermal dryers
2. Kraft pulp mills
3. Portland cement plants
4. Primary zinc smelters
5. Iron and steel mills
6. Primary aluminum ore reduction plants
7. Primary copper smelters
8. Municipal incinerators capable of charging more than 250 tons of refuse per day.
9. Hydrofluoric, sulfuric or nitric acid plants
10. Petroleum refineries
11. Lime plants
12. Phosphate rock processing plants
13. Coke oven batteries
14. Sulfur recovery plants
15. Carbon black plants, furnace process
16. Primary lead smelters
17. Fuel conversion plants
18. Sintering plants
19. Secondary metal production plants
20. Chemical process plants (The chemical processing plants category does not include ethanol production facilities that produce ethanol by natural fermentation, as described by the six−digit code of 312140 or 325193 in the North American Industry Classification System United States, 2007)
21. Fossil-fuel boilers, or combination thereof, totaling more than 250 million BTU per hour heat input
22. Petroleum storage and transfer units with a total storage capacity exceeding 300,000 barrels
23. Taconite ore processing plants
24. Glass fiber processing plants
25. Charcoal production plants
26. Fossil-fuel-fired steam electric plants of more than 250 million BTU per hour heat input
27. Any other stationary source category not included in this paragraph which as of August 7, 1980 is being regulated under section 111 or 112 of the Act (42 USC 7411 or 7412).

APPENDIX C – National Emissions Standards for Hazardous Air Pollutants (NESHAP) Source Categories

Promulgation dates and other information is available on EPA's website: *https://www.epa.gov/stationary-sources-air-pollution/national-emission-standards-hazardous-air-pollutants-neshap-9*.

Aerospace
Asbestos
Asphalt Processing and
Asphalt Roofing Manufacturing
Auto and Light Duty Truck (surface coating)
Benzene Waste Operations*
Boat Manufacturing
Brick and Structural Clay Products Manufacturing
Clay Ceramics Manufacturing
Cellulose Products
Manufacturing/Miscellaneous Viscose Processes
- Cellulose Food Casing
- Rayon
- Cellulosic Sponge
- Cellophane
- Cellulose Ethers Production
- Carboxymethyl Cellulose
- Methyl Cellulose
- Cellulose Ethers

Chromium Electroplating
- Chromic Acid Anodizing
- Decorative Chromium Electroplating
- Hard Chromium Electroplating

Clean Air Mercury Rule
Coke Ovens: Pushing, Quenching, & Battery Stacks*
Coke Ovens
- Charging, Top Side, and Door Leaks

Combustion Sources at Kraft, Soda, and Sulfite Pulp & Paper Mills (Pulp and Paper MACT II)
Commercial Sterilizers
- Commercial Sterilization Facilities

Degreasing Organic Cleaners
- Halogenated Solvent Cleaners

Dry Cleaning
- Commercial dry cleaning dry-to-dry
- Commercial dry cleaning transfer machines
- Industrial dry cleaning dry-to-dry
- Industrial dry cleaning transfer machines

Engine Test Cells/Stands (Combined with Rocket Testing Facilities)
Fabric Printing, Coating & Dyeing
Ferroalloys Production
Flexible Polyurethane Foam Fabrication Operation
Flexible Polyurethane Foam Production
Friction Products Manufacturing
Gasoline Distribution (Stage 1)
General Provisions
Generic MACT +
- Acetal Resins
- Hydrogen Fluoride
- Polycarbonates Production
- Acrylic/Modacrylic Fibers

Generic MACT +
- Carbon black production
- Cyanide chemicals mfg.
- Ethylene processes
- Spandex production

Hazardous Waste Combustion
- Hazardous Waste Incinerators (A)
- Hazardous Waste Incinerators (M)

Hazardous Organic NESHAP
(Synthetic Organic Chemical Manufacturing Industry)
Hydrochloric Acid Production
- Fumed Silica Production

Industrial, Commercial and Institutional Boilers and Process Heaters
Industrial Cooling Towers
Integrated Iron and Steel
Iron and Steel Foundries*
Large Appliances (surface coating)
Leather Finishing Operations
Lime Manufacturing

Magnetic Tape (surface coating)
Manufacturing Nutritional Yeast (formerly Baker's Yeast)
Marine Vessel Loading Operations
Mercury Cell Chlor-Alkali Plants (formerly Chlorine Production)
Metal Can (surface coating)
Metal Coil (surface coating)
Metal Furniture (surface coating)
Mineral Wool Production
Misc. Coating Manufacturing
Misc. Metal Parts and Products (surface coating)

- Asphalt/Coal Tar Application to Metal Pipes

Misc. Organic Chemical Production and Processes (MON)

- Alkyd Resins Production
- Ammonium Sulfate Production
- Benzyltrimethylammonium Chloride Prod.
- Carbonyl Sulfide Production
- Chelating Agents Production
- Chlorinated Paraffins Production
- Ethylidene Norbornene Production
- Explosives Production
- Hydrazine Production
- Maleic Anhydride Copolymers Production
- Manufacture of Paints, Coatings, & Adhesives
- OBPA/1, 3-diisocyanate Production
- Photographic Chemicals Production
- Phthalate Plasticizers Production
- Polyester Resins Production
- Polymerized Vinylidene Chloride Prod.
- Polymethyl Methacrylate Resins Prod.
- Polyvinyl Acetate Emulsions Prod.
- Polyvinyl Alcohol Production
- Polyvinyl Butyral Production
- Quaternary Ammonium Comp. Prod.
- Rubber Chemicals Production
- Symmetrical Tetrachloropyridine Production

Municipal Solid Waste Landfills
Natural Gas Transmission and Storage
Off-Site Waste Recovery Operations
Oil & Natural Gas Production
Organic Liquids Distribution (non-gasoline)
Paper and Other Web (surface coating)
Pesticide Active Ingredient Production

- 4-Chlror-2-Methyl Acid Production
- 2,4 Salts & Esters Production
- 4,6-dinitro-o-cresol Production
- Butadiene Furfural Cotrimer
- Captafol Production
- Captan Production
- Chloroneb Production
- Chlorothalonil Production
- Dacthal (tm) production
- Sodium Pentachlorophenate Production
- Tordon (tm) Acid Production

Petroleum Refineries
Petroleum Refineries

- Catalytic Cracking
- Catalytic Reforming
- Sulfur Plant Units
- Associated Bypass Lines

Pharmaceuticals Production
Phosphoric Acid/Phosphate Fertilizers
Plastic Parts (surface coating)
Plywood and Composite Wood Products (formerly Plywood and Particle Board Manufacturing)
Polyether Polyols Production
Polymers & Resins I

- Butyl Rubber
- Epichlorohydrin Elastomers
- Ethylene Propylene Rubber
- Hypalon (TM) Production
- Neoprene Production
- Nitrile Butadiene Rubber
- Polybutadiene Rubber
- Polysulfide Rubber
- Styrene-Butadiene Rubber & Latex

Polymers & Resins II

- Epoxy Resins Production
- Non-Nylon Polyamides Production

Polymers & Resins III

- Amino Resins
- Phenolic Resins

Polymers & Resins IV

- Acrylonitrile-Butadiene-Styrene
- Methyl Methacrylate-Acrylonitrile+
- Methyl Methacrylate-Butadiene++
- Polystyrene
- Styrene Acrylonitrile
- Polyethylene Terephthalate
- Nitrile Resins

Polyvinyl Chloride and Copolymers Production

Portland Cement Manufacturing
Primary Aluminum
Primary Lead Smelting
Primary Copper
Primary Magnesium Refining
Printing and Publishing (surface coating)
Publicly Owned Treatment Works (POTW)
Pulp & Paper (non-combust) MACT I
Pulp & Paper (non-chem) MACT III
Reciprocating Internal Combustion Engines
(RICE) (NESHAP/NSPS)
Refractory Products Manufacturing
Reinforced Plastic Composites Production
Rubber Tire Manufacturing
Secondary Aluminum
Secondary Lead Smelters
Semiconductor Manufacturing
Shipbuilding & Ship Repair (surface coating)
Site Remediation
Solvent Extraction for Vegetable Oil Production
Stationary Combustion Turbines*
Steel Pickling-HCL Process
Taconite Iron Ore Processing
Tetrahydrobenzaldehyde Manufacture
(Formerly Butadiene Dimers Production)
Wet Formed Fiberglass Mat Production
Wood Building Products (surface coating)
(formerly Flat Wood Paneling Products)
Wood Furniture (surface coating)
Wool Fiberglass Manufacturing

APPENDIX D – Federally Regulated Hazardous Air Pollutants listed in s. 112(b), Clean Air Act

CAS Number	Chemical Name
75070	Acetaldehyde
60355	Acetamide
75058	Acetonitrile
98862	Acetophenone
53963	2-Acetylaminofluorene
107028	Acrolein
79061	Acrylamide
79107	Acrylic acid
107131	Acrylonitrile
107051	Allyl chloride
92671	4-Aminobiphenyl
62533	Aniline
90040	o-Anisidine
1332214	Asbestos
71432	Benzene
92875	Benzidine
98077	Benzotrichloride
100447	Benzyl chloride
92524	Biphenyl
117817	Bis(2-ethylhexyl)phthalate (DEHP)
542881	Bis(chloromethyl)ether
75252	Bromoform
106990	1,3-Butadiene
156627	Calcium cyanamide
133062	Captan
63252	Carbaryl
75150	Carbon disulfide
56235	Carbon tetrachloride
463581	Carbonyl sulfide
120809	Catechol
133904	Chloramben
57749	Chlordane
7782505	Chlorine
79118	Chloroacetic acid
532274	2-Chloroacetophenone
108907	Chlorobenzene
510156	Chlorobenzilate
67663	Chloroform
107302	Chloromethyl methyl ether
126998	Chloroprene
1319773	Cresols/Cresylic acid (isomers and mixture)
95487	o-Cresol
108394	m-Cresol
106445	p-Cresol
98828	Cumene
94757	2,4-D, salts and esters

CAS Number	Chemical Name
3547044	DDE
334883	Diazomethane
132649	Dibenzofurans
96128	1,2-Dibromo-3-chloropropane
84742	Dibutylphthalate
106467	1,4-Dichlorobenzene(p)
91941	3,3-Dichlorobenzidene
111444	Dichloroethyl ether (Bis(2-chloroethyl)ether)
542756	1,3-Dichloropropene
62737	Dichlorvos
111422	Diethanolamine
121697	N,N-Diethyl aniline (N,N-Dimethylaniline)
64675	Diethyl sulfate
119904	3,3-Dimethoxybenzidine
60117	Dimethyl aminoazobenzene
119937	3,3'-Dimethyl benzidine
79447	Dimethyl carbamoyl chloride
68122	Dimethyl formamide
57147	1,1-Dimethyl hydrazine
131113	Dimethyl phthalate
77781	Dimethyl sulfate
534521	4,6-Dinitro-o-cresol, and salts
51285	2,4-Dinitrophenol
121142	2,4-Dinitrotoluene
123911	1,4-Dioxane (1,4-Diethyleneoxide)
122667	1,2-Diphenylhydrazine
106898	Epichlorohydrin (l-Chloro-2,3-epoxypropane)
106887	1,2-Epoxybutane
140885	Ethyl acrylate
100414	Ethyl benzene
51796	Ethyl carbamate (Urethane)
75003	Ethyl chloride (Chloroethane)
106934	Ethylene dibromide (Dibromoethane)
107062	Ethylene dichloride (1,2-Dichloroethane)
107211	Ethylene glycol
151564	Ethylene imine (Aziridine)
75218	Ethylene oxide
96457	Ethylene thiourea
75343	Ethylidene dichloride(1,1-Dichloroethane)
50000	Formaldehyde
76448	Heptachlor
118741	Hexachlorobenzene
87683	Hexachlorobutadiene
77474	Hexachlorocyclopentadiene

CAS Number	Chemical Name
67721	Hexachloroethane
822060	Hexamethylene-1,6-diisocyanate
680319	Hexamethylphosphoramide
110543	Hexane
302012	Hydrazine
7647010	Hydrochloric acid
7664393	Hydrogen fluoride (Hydrofluoric acid)
123319	Hydroquinone
78591	Isophorone
58899	Lindane (all isomers)
108316	Maleic anhydride
67561	Methanol
72435	Methoxychlor
74839	Methyl bromide (Bromomethane)
74873	Methyl chloride (Chloromethane)
71556	Methyl chloroform (1,1,1-Trichloroethane)
60344	Methyl hydrazine
74884	Methyl iodide (Iodomethane)
108101	Methyl isobutyl ketone (Hexone)
624839	Methyl isocyanate
80626	Methyl methacrylate
1634044	Methyl tert butyl ether
101144	4,4-Methylene bis(2-chloroaniline)
75092	Methylene chloride (Dichloromethane)
101688	Methylene diphenyl diisocyanate (MDI)
101779	4,4'-Methylenedianiline
91203	Naphthalene
98953	Nitrobenzene
92933	4-Nitrobiphenyl
100027	4-Nitrophenol
79469	2-Nitropropane
684935	N-Nitroso-N-methylurea
62759	N-Nitrosodimethylamine
59892	N-Nitrosomorpholine
56382	Parathion
82688	Pentachloronitrobenzene (Quintobenzene)
87865	Pentachlorophenol
108952	Phenol
106503	p-Phenylenediamine
75445	Phosgene
7803512	Phosphine
7723140	Phosphorus
57578	beta-Propiolactone
123386	Propionaldehyde
114261	Propoxur (Baygon)
78875	Propylene dichloride (1,2-Dichloropropane)
75569	Propylene oxide
75558	1,2-Propylenimine (2-Methyl aziridine)
91225	Quinoline
106514	Quinone

CAS Number	Chemical Name
100425	Styrene
96093	Styrene oxide
1746016	2,3,7,8-Tetrachlorodibenzo-p-dioxin
79345	1,1,2,2-Tetrachloroethane
127184	Tetrachloroethylene (Perchloroethylene)
85449	Phthalic anhydride
1336363	Polychlorinated biphenyls (Aroclors)
1120714	1,3-Propane sultone
7550450	Titanium tetrachloride
108883	Toluene
95807	2,4-Toluene diamine
584849	2,4-Toluene diisocyanate
95534	o-Toluidine
8001352	Toxaphene (chlorinated camphene)
	1208211,2,4-Trichlorobenzene
120821	1,2,4-Trichlorobenzene
79005	1,1,2-Trichloroethane
79016	Trichloroethylene
95954	2,4,5-Trichlorophenol
88062	2,4,6-Trichlorophenol
121448	Triethylamine
1582098	Trifluralin
540841	2,2,4-Trimethylpentane
108054	Vinyl acetate
593602	Vinyl bromide
75014	Vinyl chloride
75354	Vinylidene chloride (1,1-Dichloroethylene)
1330207	Xylenes (isomers and mixture)
95476	o-Xylenes
108383	m-Xylenes
106423	p-Xylenes
--	Antimony Compounds
--	Arsenic Compounds (inorganic including arsine)
--	Beryllium Compounds
--	Cadmium Compounds
--	Chromium Compounds
--	Cobalt Compounds
--	Coke Oven Emissions
--	Cyanide Compounds[1]
--	Lead Compounds
--	Manganese Compounds
--	Mercury Compounds
--	Fine mineral fibers[3]
--	Nickel Compounds
--	Polycylic Organic Matter[4]
--	Radionuclides (including radon)[5]
--	Selenium Compounds

NOTE: For all listings above that contain the word "compounds" and for glycol ethers, the following applies: Unless otherwise specified, these listings are defined as including any unique chemical substance that contains the named chemical (i.e., antimony, arsenic, etc.) as part of that chemical's infrastructure.

[1] X'CN where X = H' or any other group where a formal dissociation may occur. For example, KCN or $Ca(CN)_2$

[2] Includes mono- and di- ethers of ethylene glycol, diethylene glycol, and triethylene glycol $R\text{-}(OCH2CH2)_n$ -OR' where
n = 1, 2, or 3
R = alkyl or aryl groups
R' = R, H, or groups which, when removed, yield glycol ethers with the structure: $R\text{-}(OCH2CH)_n\text{-}OH$. Polymers are excluded from the glycol category.

[3] Includes mineral fiber emissions from facilities manufacturing or processing glass, rock, or slag fibers (or other mineral derived fibers) of average diameter 1 micrometer or less.

[4] Includes organic compounds with more than one benzene ring, and which have a boiling point greater than or equal to 100 °C.

[5] A type of atom which spontaneously undergoes radioactive decay.